THE METRO®

Making Furniture for Tomorrow

THE METRO®

update new trend OFFICE FURNITURE

Album
03/2018

THE METRO®

works for you, furnishing high performing offices that help people do their best work.

We focus on helping you create a domain to bring people together; a socially charged workspace where people gather to exchange ideas, cocreate and connect.

We hope The City can help you achieve the highest outcome of work - that sense of achivement and belonging that occurs when colleagues become collaborators, working together to produce ideas that build a better world.

WARRANTY

03 YEARS

THE METRO'S PRODUCTS

Category

T+
06-23

G60
24-33

The Work
34-45

Seating
110-111

SND
112-117

Star
118-135

Platform
136-149

Manifesto
150-187

Brio
246-259

Masa
260-267

Cabinet
268-274

Accessories
275-279

Ato
46-71

Manifesto II
72-85

Trio
86-99

Boss
100-109

Bello
188-207

Sonic
208-233

Curve
234-239

Molex
240-245

T+series

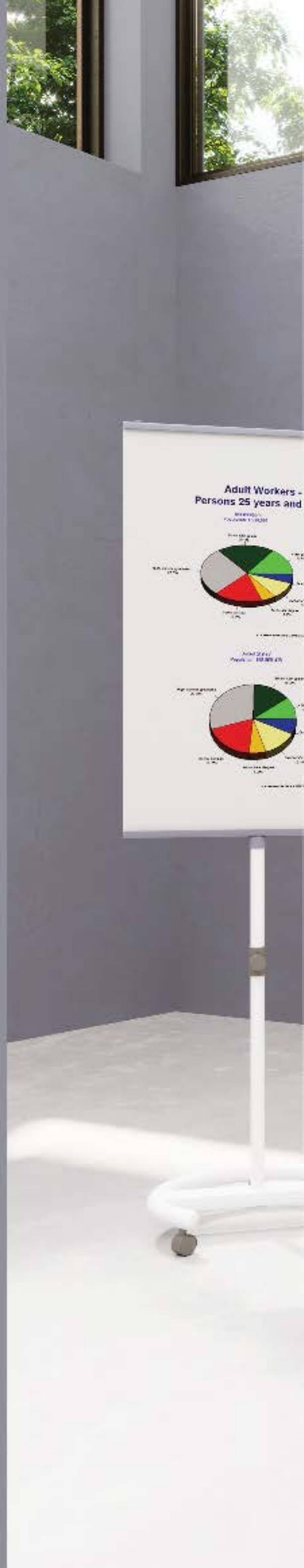
Adult Workers -
Persons 25 years and

Older
T+ Series

Active and dynamic working

T+ is continuously innovating - not only in the product development, but also in all processes that regulate their design, production and delivery. We keep a careful eye on the impact of our production on the environment. We also constantly measure the quality of our output.

Ergonomists recommend adjustment throughout the day to address the stress and strain of intense computing activity.
T+ Series table can be easily raised or lowered to an optimal height, providing employees with a healthy workspace.

T+ Series

Find a great collection of Height Adjustable Desks at T+ Series

T+ Series

Our attractive height - adjustable desks deliver the full sit-stand experience for people who need a larger desktop and are okay with replacing their existing desk.

G60 Series

G60 Series increase efficiency and give your workers privacy to get their work done with our partitions. Our desk mounted office screens and partitions are a fantastic solution if you already have office desks in place. Desk mounted partitions are a great way of making sure your employees are comfortable when working.

Give employees the space they need with G60 that carve out personalized worspacse. Move around freestanding screens as neeed, and use desktop panels to create a workstation out of virtually any table or desk. The panels reduce noise and help employees focus their attention. Maximize Office Space.

Our desk screens and partitions are made-to-order so are sure to suit your specific requirements. Available in numerous sizes, styles, finishes and materials!

The Work

Series

Change together.

If two heads are better than one... make sure they see eye to eye. Bring your team together in a workspace that helps them be more creative, smarter, faster.
Innovate or die. As your team's ideas and thinking change over time, your furniture can too...

Keep the change.

The work is the right choise for everything your business is today and everything it becomes tomorrow. No matter how many people you add and how complicated things become, rely on Tour to always look great, change easily, and be one of the best team.

The more things change, the more they stay the same.

Changing the look and functionality of your office doesn't mean you need to buy more furniture. Tour gives you the basic building blocks, you decide how to arrange and rearrange them!

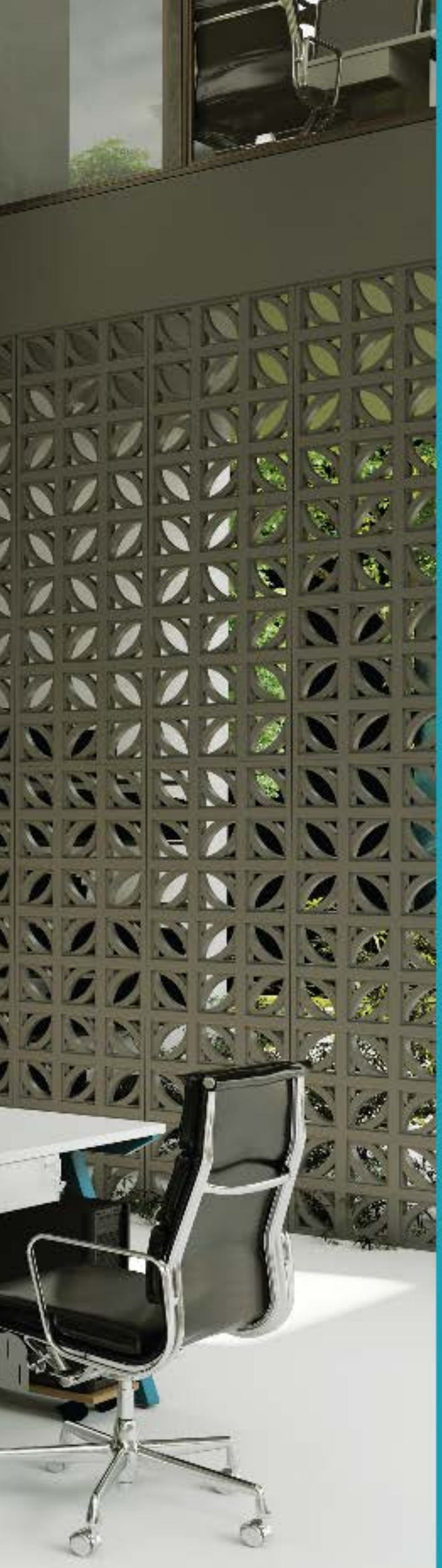

Ato Series

Năng động & Thanh lịch

Ato series – Dynamic and Elegant

Ato series is a best combination of Manifesto series and Sonic series.
The dynamic in Manifesto combine with the elegance in Sonic bring the way-out impression to the workspaces in Ato series.
With its unique, Ato series adapts to a variety of functionalities and aesthetics.

Ato Series

Ato Series was created to introduce an element of the unexpected, to spur imagination. Arranged in workstation cluster of 4 setting, users will intuitively realise that they could settle into these individual workstations. They are equipped with ergonomic furnishings and colourful options, allowing you to work in a health-positive way in an environment customised for you.

Ato Series

Ato Series

Ato Series

Ato Series

Ato 120 Degree Table

The Ato 120 degree table clusters are exciting solution for companies that require high active and creative abilities. Straight triangular corners do not only create the large table area, but they also contribute to rise aesthetics to the office, this is, moreover, a inspiring way for employees to work harder.

Ato Series

PHILIPS

Especially with the dynamic footprints, which allow the combination of mobile cabinets in order to be maximum convenience, flexibility in the application and enhance the special characters of each office.

Ato meeting table

An ATO meeting table is an ideal setting for people to work together to generate new ideas and drive their work forward. An elegant Ato meeting table will improve the effectiness of meeting.

Ato Series

The Ato leg design is inspired by the creative process, in which ideas are often diverged to make an impact. Axis creates a subtle yet dynamic difference to your workspace.

ATO MANAGER DESKING create the ideal working place to help manager can take the right decisions.

Manifesto II Series Extremely Trendy

With minimal and straight lines, Manifesto II series trendily adapts to a variety

The perfect combination of working clutter, filing cabinets and seat cushions make the perfect working space for your office, and this is perfectly shown by 2 clutters in the Manifesto II Series.

The combination of round tables allow employees to exchange each other without spending too much time on moving or office space. Sometimes, employees can leave their similar position and work in this area to find inspiration or change the workspace.

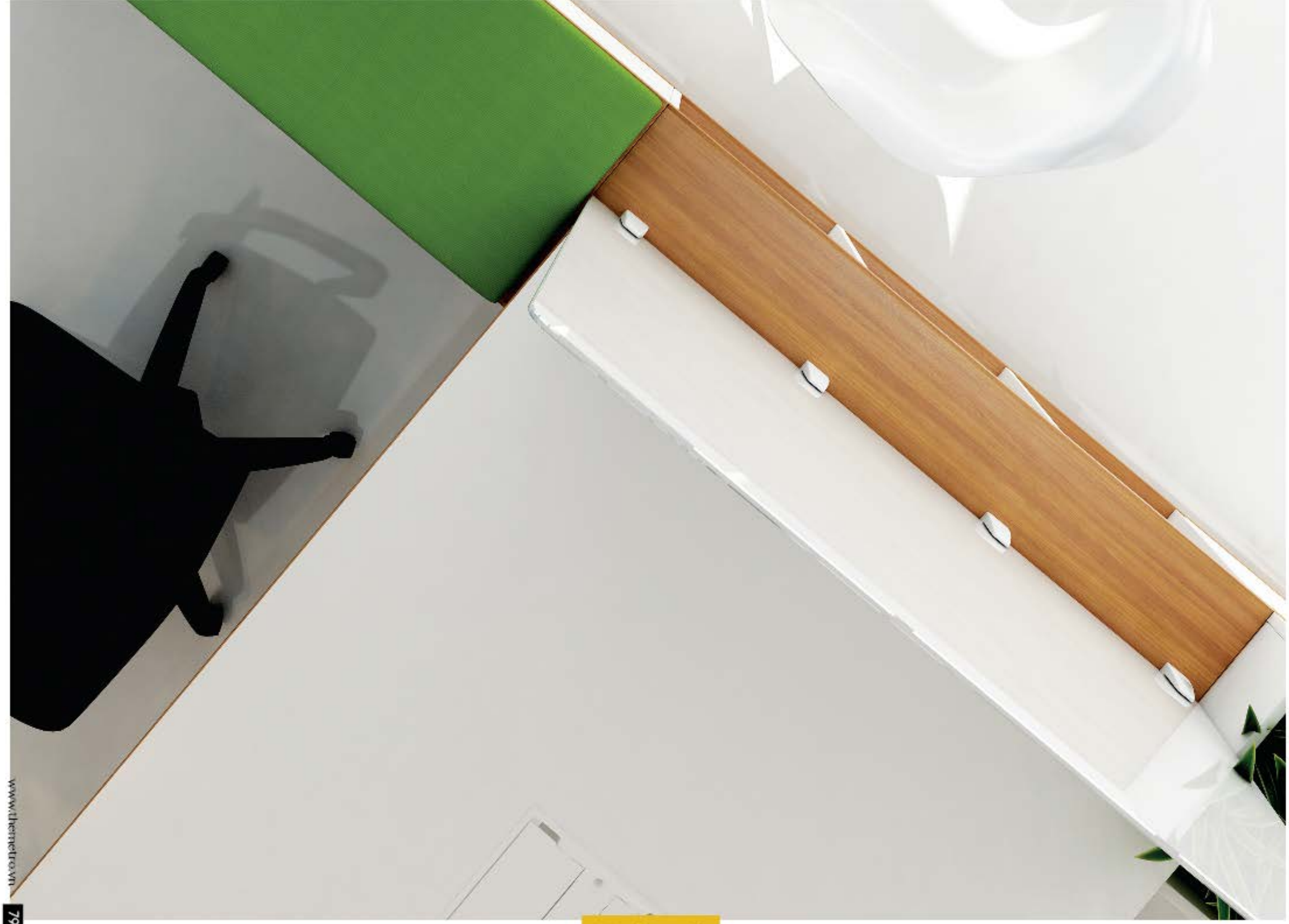

Communication is one of important factor which directly impact on the labor efficiency. The more we work together, the more we get together.

Manifesto II meeting table

is an ideal and trendy furniture solution for meeting areas.
With an absolute minimalism, Manifesto II meeting table system surrounded by MFC wood top and white, black, grey metal finished base.

COVENT
BLOOMSBURY
NOTTING
LONDON
ABBEY ROAD
LEICESTER
GREENWICH
OXFORD ST
WESTMINSTER
#BRUSHYOURTEETH

Manifesto II

The trendy geometry of the stylized table legs is highlighted-spot of Manifesto II.

Trio Series

TRIO Series - Professionalism and inspiration
Are you searching for a professional design for your office?
So, TRIO is the answer you may look for…

Creativeness, efficiency, dynamic and connection are factors which create the ideal working environment for modern offices.

Trio

Trio

One of the hardest challenges in creating an inspirational executive workspace is how to provide a personal environment where employee can feel like being at home.
Workstation cluster of 4 in Trio Series get it for business of you.

Trio

A TRIO Meeting Space is designed to support information sharing. Because from the result of research, the workplace feature most people chose as very important is sufficient meeting and conference rooms.

Meeting

Trio

Boss Series
Powerfully Luxury

The impression of Boss series come from the integration of the top and base's material. This make an outstanding and luxury look for office.

Office furniture for manager need to be able to reflect user's personality.
Boss series is just born for manager.

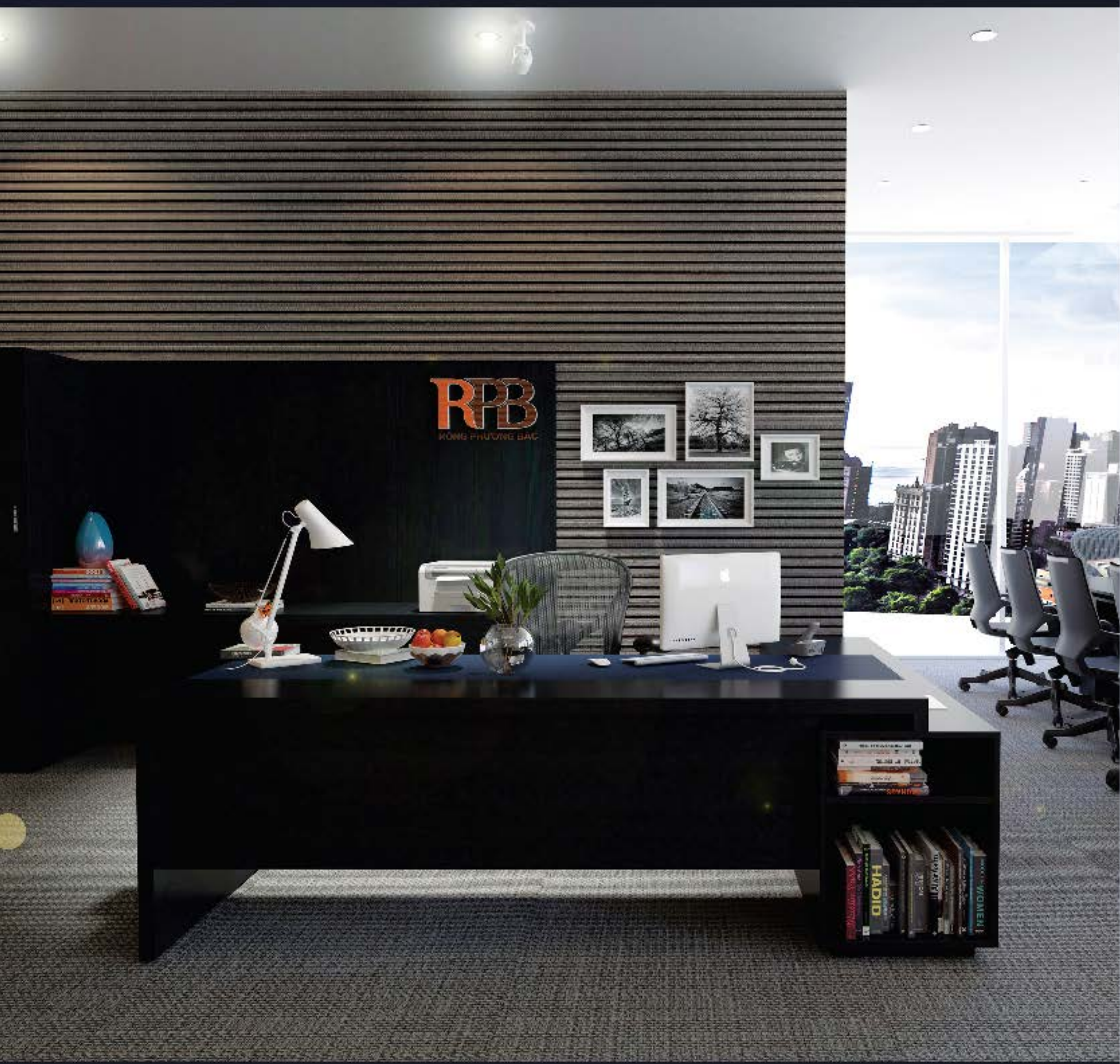

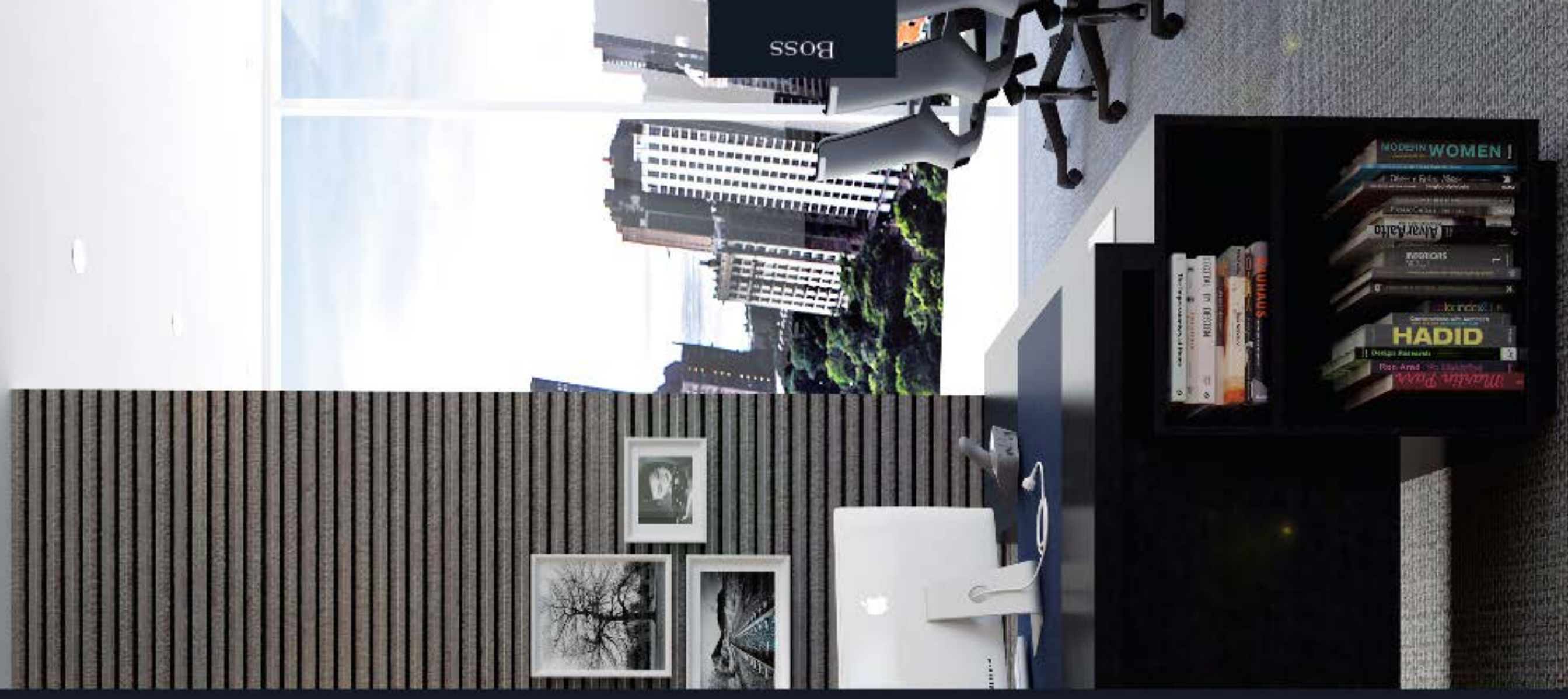
Boss
MODERN WOMEN I
Alvar Aalto
HADID
BAUHAUS

In Boss series, we provides solution for the demand of talking to each other in meetings, discussions, conferences.

There are unique table design based on the shape of the table surface, the flexibility between the drawers is arranged on the table and a part of straight leg that makes difference from the 4 seats table in the Manifesto II series. These perfect combination are able to ensure completely the highest demand of a modern office.

Seating

The elegance of a simple meet-up

SND Series
Maximize the efficiency

Understanding the functional and aesthetic needs of current offices, SND Series are designed in order to bring the best choices for customers. We focus deeply on the design and the quality products which make a unique clusters

PINK
DESIGN
TEAM

Maximizing the efficiency of labor and office space is what organizations and businesses always aim to. SND workstation creates a perfect workspace for every kind of office.

PINK
DESIGN
TEAM

Perseverance in action, strength and decisiveness in the decision, flexibility in any situations are the key element of leadership. SND manager table is not only a working area but also a spirit of user.

STAR SERIES

Star system is developed based on the attributed guidelines and benefits to be and outstanding, trendy, and user friendly for the office environment.

Star involved minimum components, simplified in design concept; maximum utilization of components; highly re-configurable; sleek and clean-cut; approachable installation techniques; multiple accessories attachment support for effective desktop management.

STAR MEETING TABLE

Meeting table is essential for every office where you will allow a discussion or a group of people get together to exchange ideas, in order to reach a decision. It is important for a decision to be made about certain topic through formal or informal debate, in order to explore solutions.

Star

STAR SPECIFICATION / THÔNG SỐ KỸ THUẬT BÀN LÀM VIỆC **STAR**

1 RECTANGULAR DESKTOPS / BÀN HÌNH CHỮ NHẬT

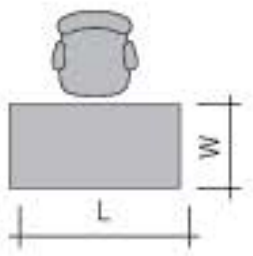

CODE	L	W	H
ST 1 - 1206	120	60	75
ST 1 - 1407	140	70	75
ST 1 _ 1608	160	80	75

2 WORK BENCH 2 DESKTOPS / BÀN CỤM THẲNG 2

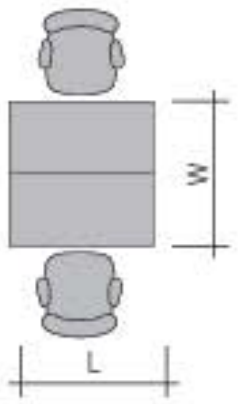

CODE	L	W	H
ST 2 - 1206	120	120	75
ST 2 - 1407	140	140	75
ST 2 - 1608	160	160	75

3 WORK BENCH 4 DESKTOPS / BÀN CỤM THẲNG 4

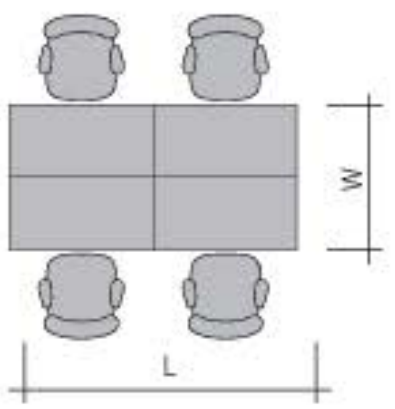

CODE	L	W	H
ST 4 - 1206	240	120	75
ST 4 - 1407	280	140	75
ST 4 - 1608	320	160	75

4 WORK BENCH 6 DESKTOPS / BÀN CỤM THẲNG 6

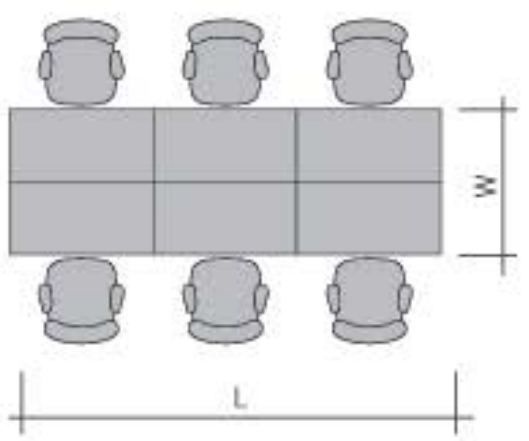

CODE	L	W	H
ST 6 - 1206	360	120	75
ST 6 - 1407	420	140	75
ST 6 - 1608	480	160	75

5 BOOMERANG GROUP DESKTOPS / BÀN CỤM 120 ĐỘ

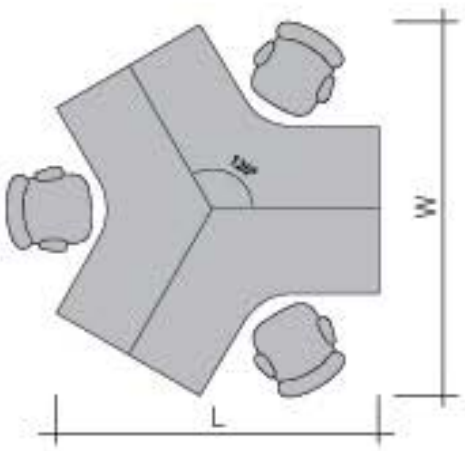

CODE	L	W	H
ST 3 - 10 - 1006	195	224	75
ST 3 - 11 - 1106	218	250	75
ST 3 - 12 - 1206	233	268	75

6 L1 - SHAPE DESKTOPS / BÀN CHỮ L1

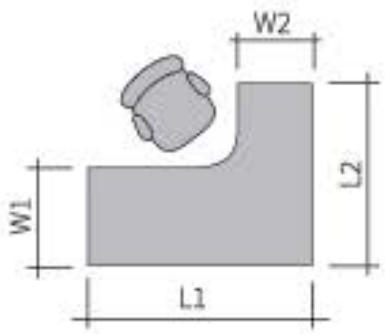

CODE	L1/W1	L2/W2	H
ST - L1 - 1616 7-6 L/R	160/70	160/60	75
ST - L1 - 1616 8-6 L/R	160/80	160/60	75
ST - L1 - 1818 7-6 L/R	180/70	180/60	75
ST - L1 - 1818 7-6 L/R	180/80	180/60	75

7 L2 - SHAPE DESKTOPS / BÀN CHỮ L2

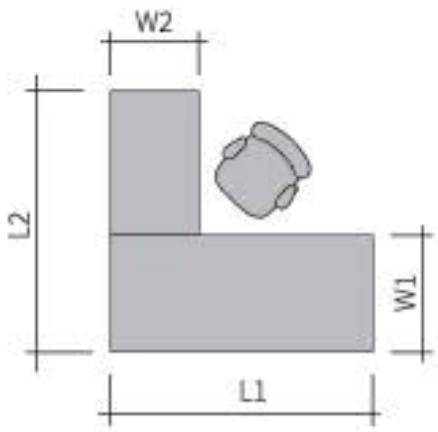

CODE	L1/W1	L2/W2	H
ST 2 - L2 - 1616 7-6 L/R	160/70	160/60	75
ST 2 - L2 - 1616 8-6 L/R	160/80	160/60	75
ST 2 - L2 - 1816 7-6 L/R	180/70	160/60	75
ST 2 - L2 - 1816 8-6 L/R	180/80	160/60	75

STAR SPECIFICATION / THÔNG SỐ KỸ THUẬT BÀN LÀM VIỆC **STAR**

1 L1 - WORK SHAPE 2 DESKTOPS / BÀN CỤM 2 DẠNG GÓC CHỮ L 1

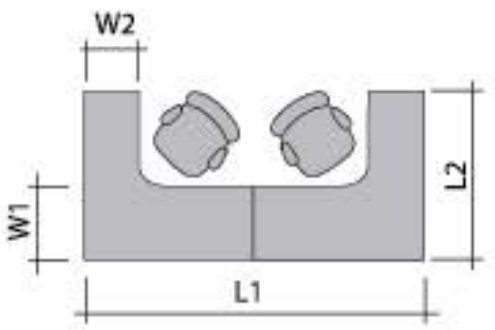

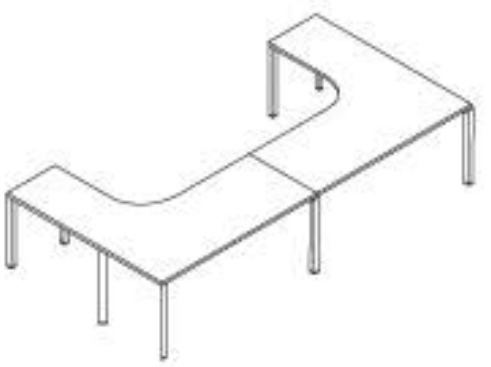

CODE	L1/W1	L2/W2	H
ST 2 - L1 - 1616 7-6	320/70	160/60	75
ST 2 - L1 - 1616 8-6	320/80	160/60	75
ST 2 - L1 - 1818 7-6	360/70	180/60	75
ST 2 - L1 - 1818 8-6	360/80	180/80	75

* Chỉ áp dụng cho khổ ván: 1.830 mm x 2.440 mm.

2 L1 - WORK SHAPE 4 DESKTOPS / BÀN CỤM 4 DẠNG GÓC CHỮ L 1

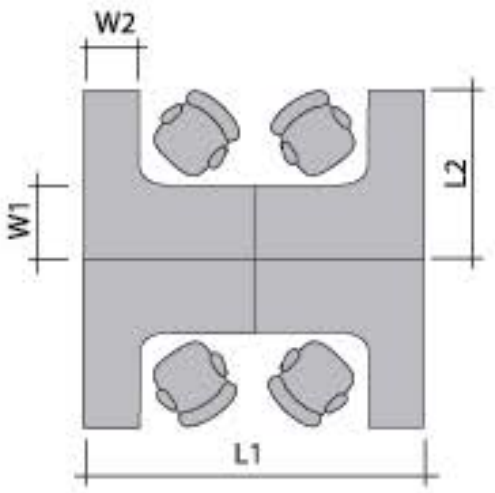

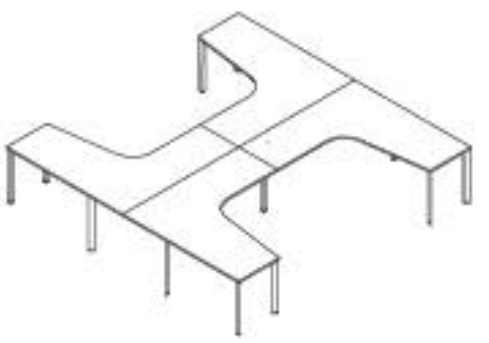

CODE	L1/W1	L2/W2	H
ST 4 - L1 - 1616 7-6	320/140	320/60	75
ST 4 - L1 - 1616 8-6	320/160	320/60	75
ST 4 - L1 - 1818 7-6	360/140	360/60	75
ST 4 - L1 - 1818 8-6	360/160	360/60	75

* Chỉ áp dụng cho khổ ván: 1.830 mm x 2.440 mm.

3 L1 - WORK SHAPE 4 DESKTOPS WITH DRAWER / BÀN CỤM 4 DẠNG GÓC CHỮ L 1 CÓ TỦ

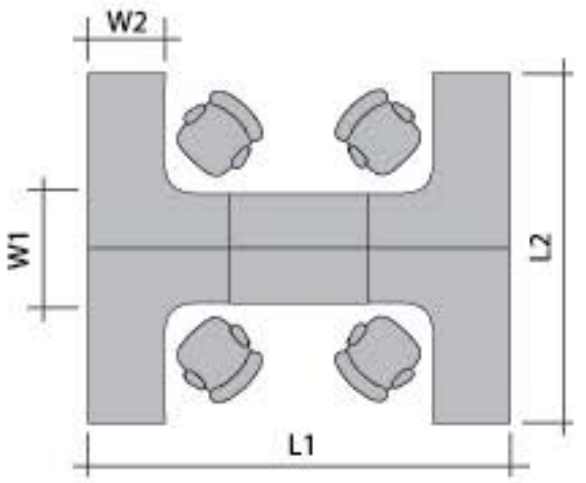

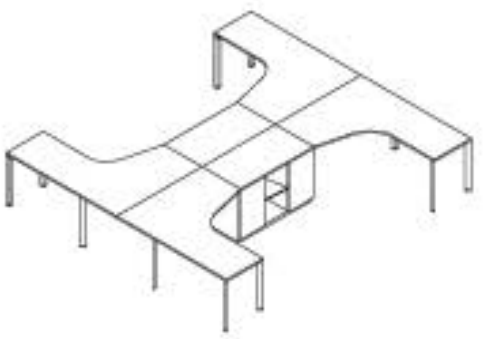

CODE	L1/W1	L2/W2	H
ST 4B - L1D - 3616 5-7	360/100	320/70	75
ST 4B - L1D - 3616 5-8	360/100	320/80	75
ST 4B - L1D - 3618 5-7	360/100	360/70	75
ST 4B - L1D - 3618 5-8	360/100	360/80	75

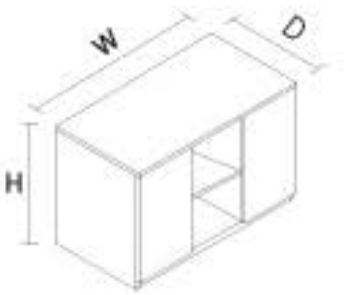

CODE	W	D	H
ST C 1206	120	50	75

4 L2 - WORK SHAPE 2 DESKTOPS / BÀN CỤM 2 DẠNG GÓC CHỮ L 2

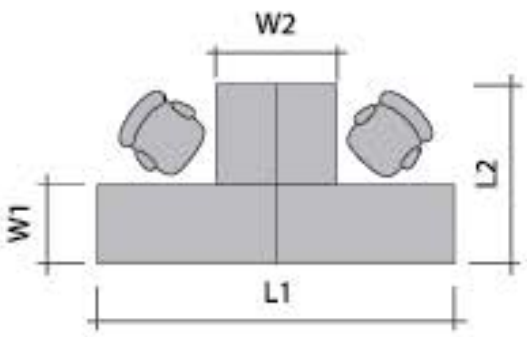

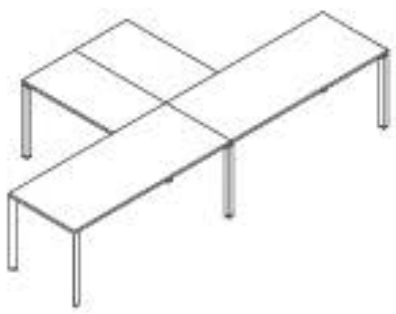

CODE	L1/W1	L2/W2	H
ST 2 - L2 - 1616 7-6	320/70	160/120	75
ST 2 - L2 - 1616 8-6	320/80	160/120	75
ST 2 - L2 - 1816 7-6	360/70	160/120	75
ST 2 - L2 - 1816 8-6	360/80	160/120	75

5 L2 - WORK SHAPE 4 DESKTOPS (SIDE BY SIDE) / BÀN CỤM 4 DẠNG GÓC CHỮ L 2 (MẶT ĐỐI MẶT)

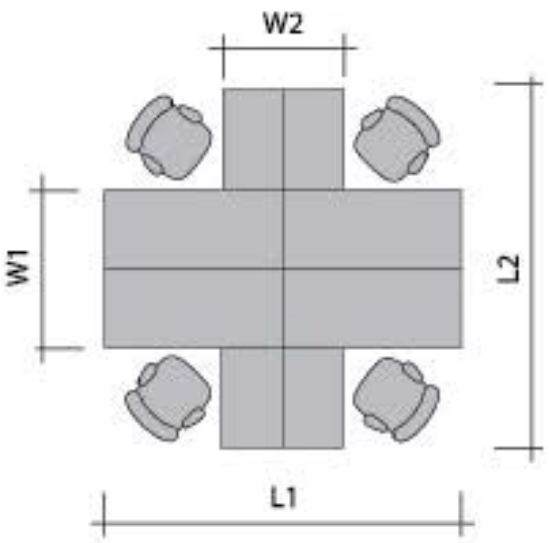

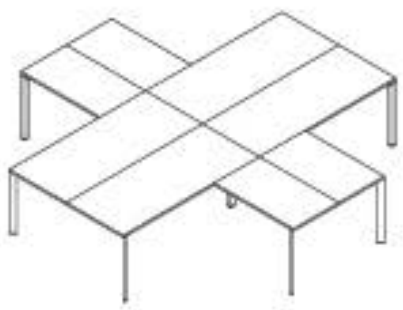

CODE	L1/W1	L2/W2	H
ST 4 - L2 S - 1616 7-6	320/140	320/120	75
ST 4 - L2 S - 1616 8-6	320/160	320/120	75
ST 4 - L2 S - 1816 7-6	360/140	320/120	75
ST 4 - L2 S - 1816 8-6	360/160	320/120	75

6 L2 - WORK SHAPE 4 DESKTOPS (BACK TO BACK) / BÀN CỤM 4 DẠNG GÓC CHỮ L 2 (LƯNG ĐỐI LƯNG)

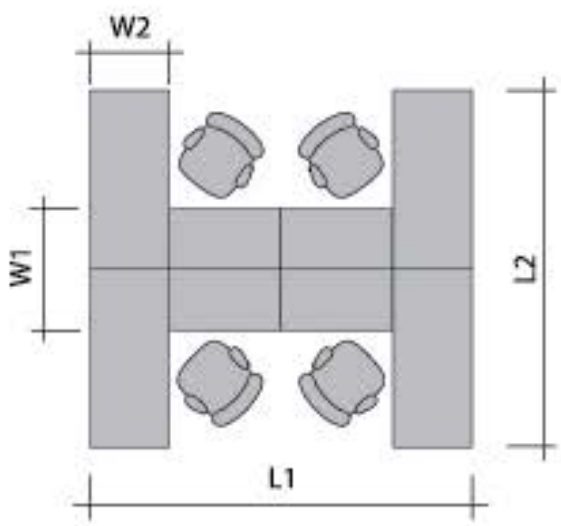

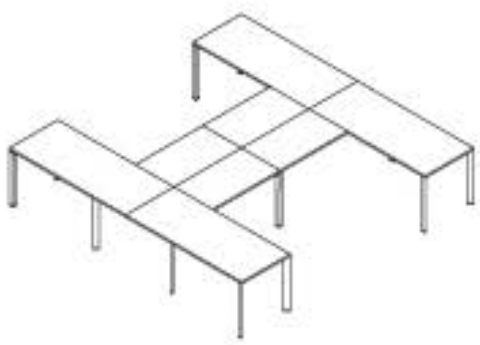

CODE	L1/W1	L2/W2	H
ST 4 - L2B - 1616 6-7	320/120	320/70	75
ST 4 - L2B - 1616 6-8	320/120	320/80	75
ST 4 - L2B - 1618 6-7	320/120	360/70	75
ST 4 - L2B - 1618 6-8	320/120	360/80	75

STAR SPECIFICATION / THÔNG SỐ KỸ THUẬT BÀN LÀM VIỆC **STAR**

1 RECTANGULAR DESK / BÀN HÌNH CHỮ NHẬT

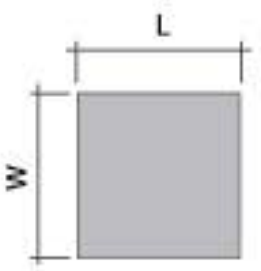

CODE	L	W	H
ST 0606 M	60	60	75
ST 0808 M	80	80	75
ST 1010 M	100	100	75
ST 1212 M	120	120	75

2 RECTANGULAR TOP / BÀN HÌNH CHỮ NHẬT

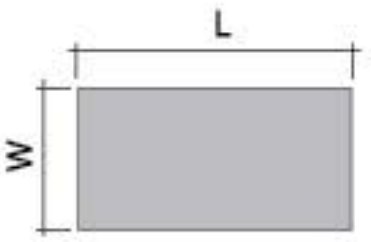

CODE	L	W	H
ST R 2010 M	200	100	75
ST R 2412 M	240	120	75

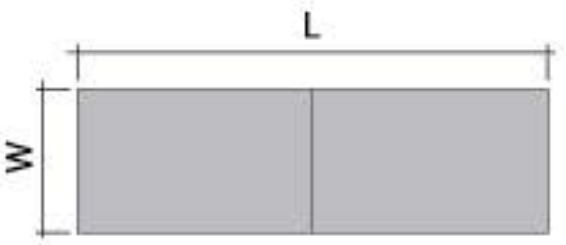

CODE	L	W	H
ST R 3612 M	360	120	75

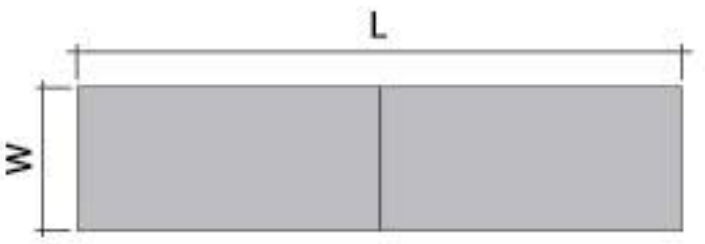

CODE	L	W	H
ST R 4816 M	480	160	75

STAR SPECIFICATION / THÔNG SỐ KỸ THUẬT BÀN QUẢN LÝ **STAR**

1 EXECUTIVE RECTANGULAR TOP WITH SIDE DRAWER / BÀN QUẢN LÝ CHỮ L VỚI 1 TỦ

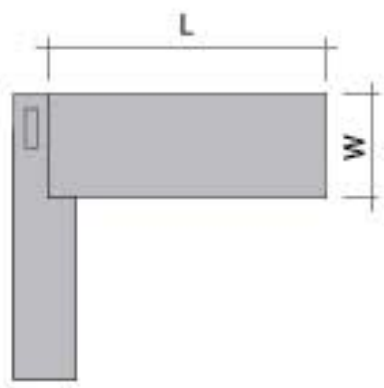

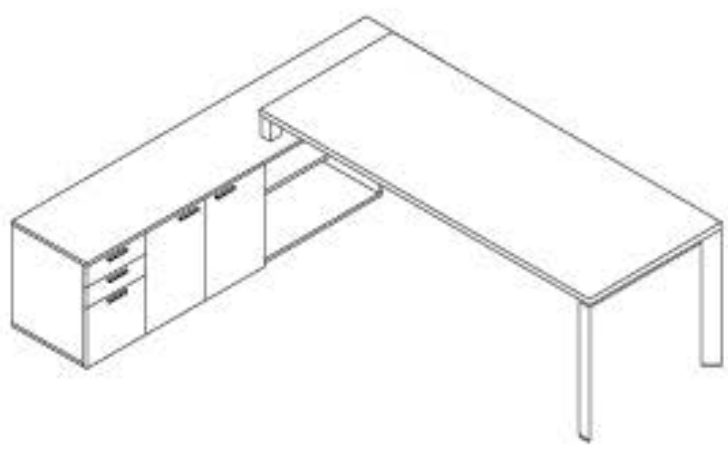

CODE	L	W	H
ST D 1807 LSC (L/R)	180	700	75
ST D 2008 LSC (L/R)	200	800	75

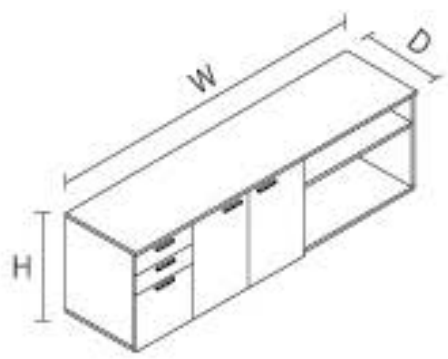

CODE	W	D	H
ST C 2045	200	50	61

Simply working area combination

PLATFORM SPECIFICATION / THÔNG SỐ KỸ THUẬT BÀN LÀM VIỆC **PLATFORM**

1 RECTANGULAR DESKTOPS / BÀN HÌNH CHỮ NHẬT

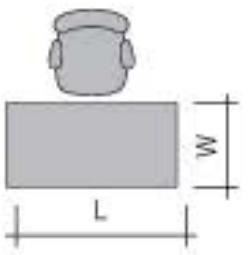

CODE	L	W	H
PF 1 - 1206	120	60	75
PF 1 - 1407	140	70	75
PF 1 - 1608	160	80	75

2 WORK BENCH 2 DESKTOPS / BÀN CỤM THẲNG 2

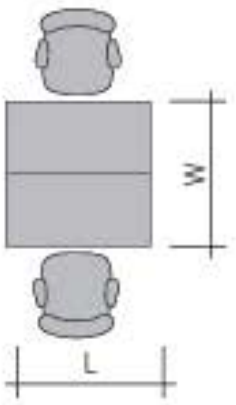

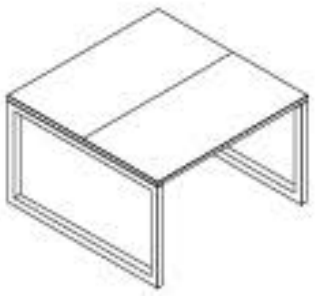

CODE	L	W	H
PF 2 - 1206	120	120	75
PF 2 - 1407	140	140	75
PF 2 - 1608	160	160	75

3 WORK BENCH 4 DESKTOPS / BÀN CỤM THẲNG 4

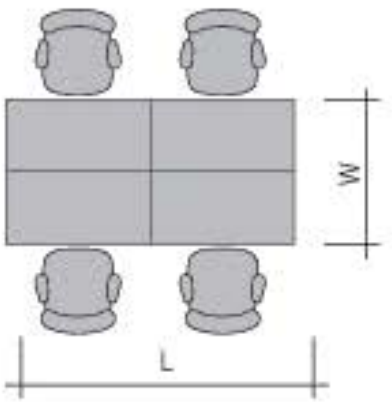

CODE	L	W	H
PF 4 - 1206	240	120	75
PF 4 - 1407	280	140	75
PF 4 - 1608	320	160	75

4 WORK BENCH 6 DESKTOPS / BÀN CỤM THẲNG 6

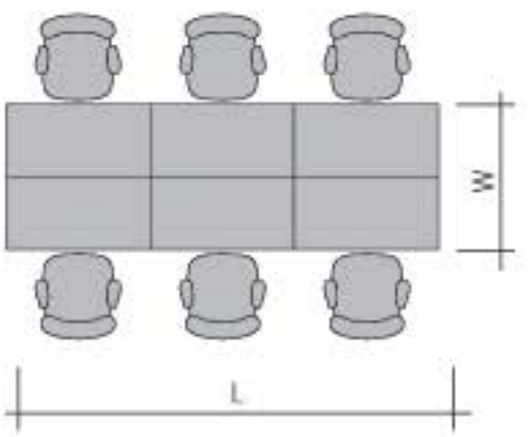

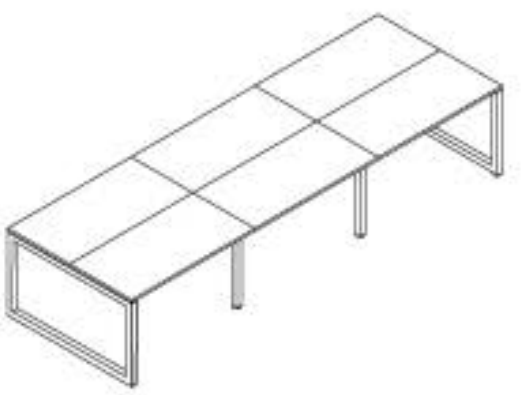

CODE	L	W	H
PF 6 - 1206	360	120	75
PF 6 - 1407	420	140	75
PF 6 - 1608	480	160	75

5 BOOMERANG GROUP DESKTOPS / BÀN CỤM 120 ĐỘ

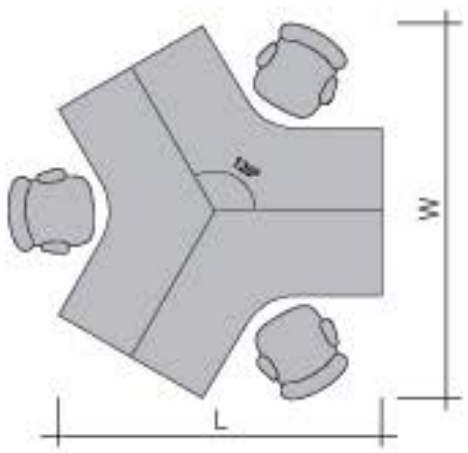

CODE	L	W	H
PF 3 - 10 - 1006	195	224	75
PF 3 - 11 - 1106	218	250	75
PF 3 - 12 - 1206	233	268	75

6 L1 - SHAPE DESKTOPS / BÀN CHỮ L1

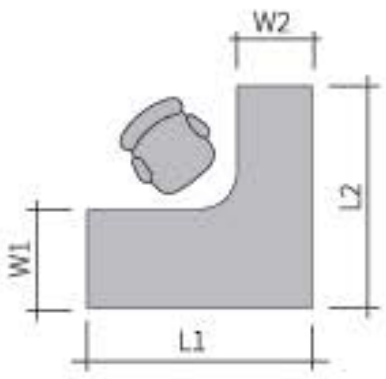

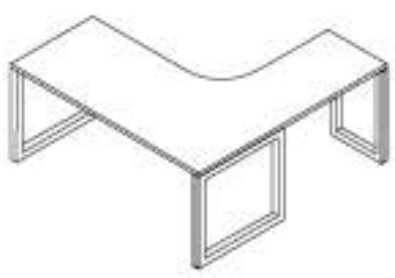

CODE	L1/W1	L2/W2	H
PF - L1 - 1616 7-6 L/R	160/70	160/60	75
PF - L1 - 1616 8-6 L/R	160/80	160/60	75
PF - L1 - 1818 7-6 L/R	180/70	180/60	75
PF - L1 - 1818 8-6 L/R	180/80	180/60	75

Platform

7 L2 - SHAPE DESKTOPS / BÀN CHỮ L2

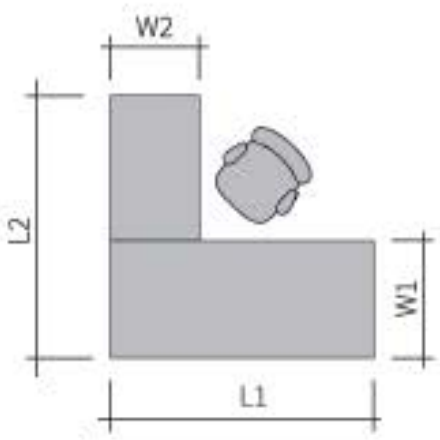

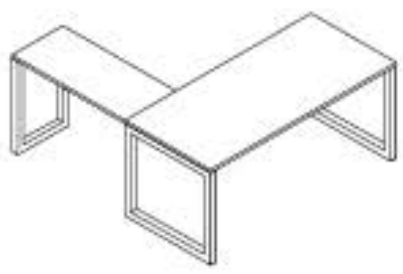

CODE	L1/W1	L2/W2	H
PF - L2 - 1616 7-6 L/R	160/70	160/60	75
PF - L2 - 1616 8-6 L/R	160/80	160/60	75
PF - L2 - 1816 7-6 L/R	180/70	160/60	75
PF - L2 - 1816 8-6 L/R	180/80	160/60	75

PLATFORM SPECIFICATION / THÔNG SỐ KỸ THUẬT BÀN LÀM VIỆC **PLATFORM**

1 L1 - WORK SHAPE 2 DESKTOPS / BÀN CỤM 2 DẠNG GÓC CHỮ L 1

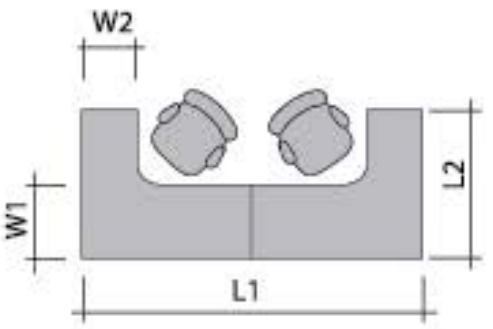

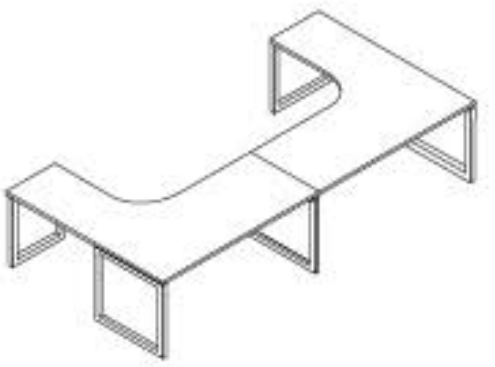

CODE	L1/W1	L2/W2	H
PF - L1 - 1616 7-6	320/70	160/60	75
PF - L1 - 1616 8-6	320/80	160/60	75
PF - L1 - 1818 7-6	360/70	180/60	75
PF - L1 - 1818 8-6	360/80	180/60	75

- Chỉ áp dụng cho khổ ván: 1.830 mm x 2.440 mm.

2 L1 - WORK SHAPE 4 DESKTOPS / BÀN CỤM 4 DẠNG GÓC CHỮ L 1

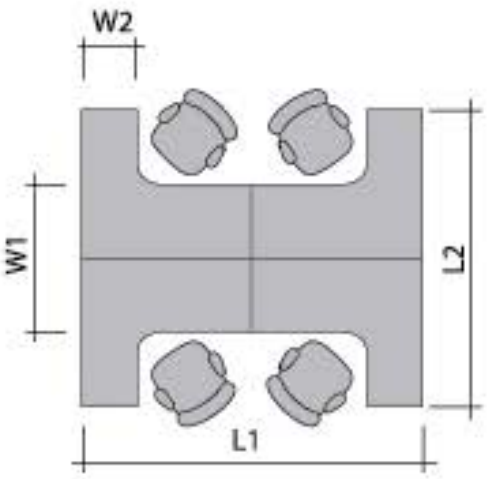

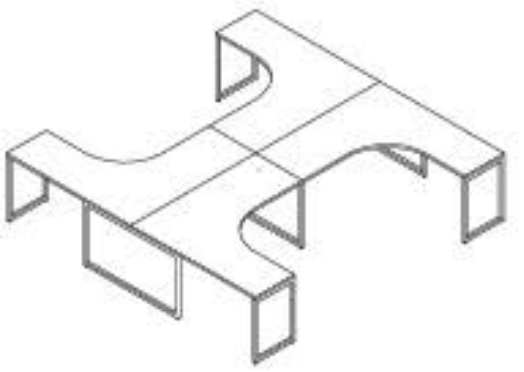

CODE	L1/W1	L2/W2	H
PF - L1 - 1616 7-6	320/140	320/60	75
PF - L1 - 1616 8-6	320/160	320/60	75
PF - L1 - 1818 7-6	360/140	360/60	75
PF - L1 - 1818 8-6	360/160	360/60	75

- Chỉ áp dụng cho khổ ván: 1.830 mm x 2.440 mm.

3 L1 - WORK SHAPE 4 DESKTOPS WITH DRAWER / BÀN CỤM 4 DẠNG GÓC CHỮ L 1 CÓ TỦ

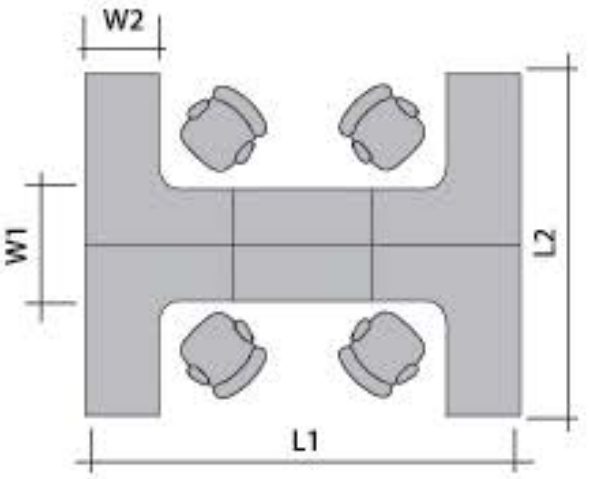

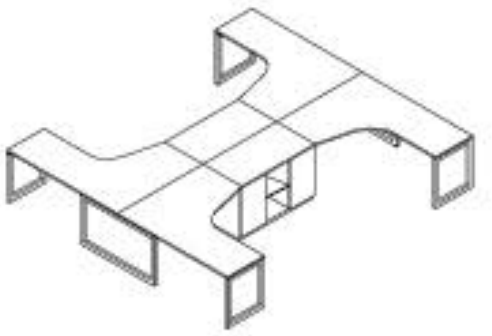

CODE	L1/W1	L2/W2	H
PF 4B - L1D - 3616 5-7	360/100	320/70	75
PF 4B - L1D - 3616 5-8	360/100	320/80	75
PF 4B - L1D - 3818 5-7	360/100	360/70	75
PF 4B - L1D - 3818 5-8	360/100	360/80	75

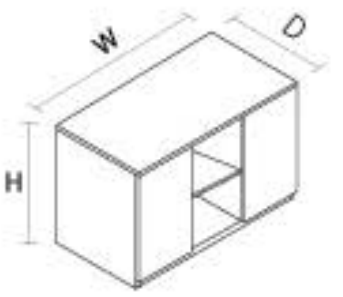

CODE	W	D	H
PF C 1206	120	50	75

4 L2 - WORK SHAPE 2 DESKTOPS / BÀN CỤM 2 DẠNG GÓC CHỮ L 2

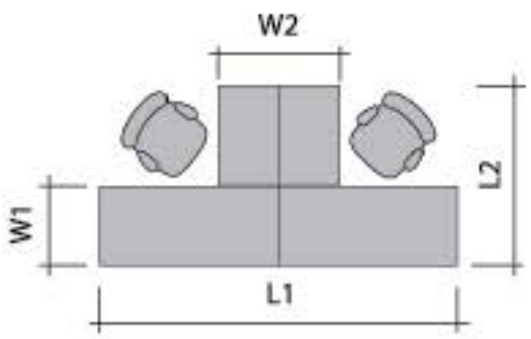

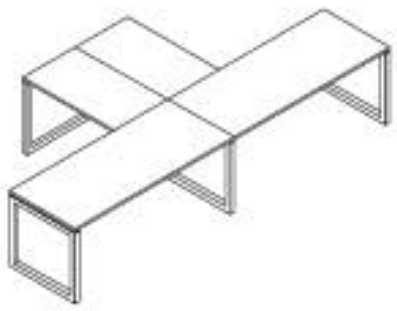

CODE	L1/W1	L2/W2	H
PF 2 - L2 - 1616 7-6	320/70	160/120	75
PF 2 - L2 - 1616 8-6	320/80	160/120	75
PF 2 - L2 - 1816 7-6	360/70	160/120	75
PF 2 - L2 - 1816 8-6	360/80	160/120	75

5 L2 - WORK SHAPE 4 DESKTOPS (SIDE BY SIDE) / BÀN CỤM 4 DẠNG GÓC CHỮ L 2 (MẶT ĐỐI MẶT)

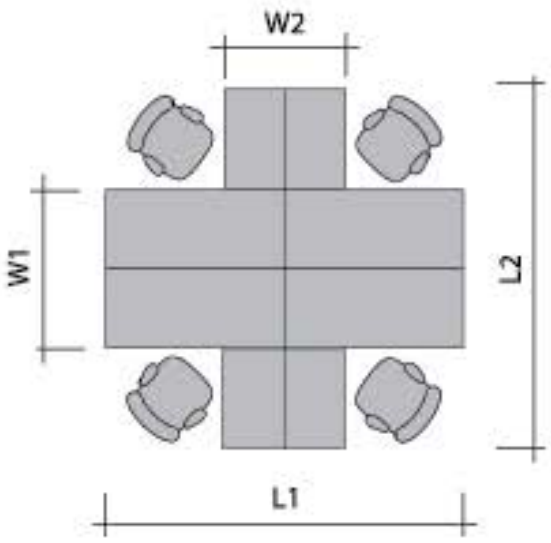

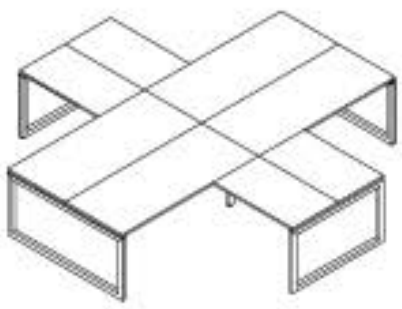

CODE	L1/W1	L2/W2	H
PF 4 - L2 S - 1616 7-6	320/140	320/120	75
PF 4 - L2 S - 1616 8-6	320/160	320/120	75
PF 4 - L2 S - 1816 7-6	360/140	320/120	75
PF 4 - L2 S - 1816 8-6	360/160	320/120	75

6 L2 - WORK SHAPE 4 DESKTOPS (BACK TO BACK) / BÀN CỤM 4 DẠNG GÓC CHỮ L 2 (LƯNG ĐỐI LƯNG)

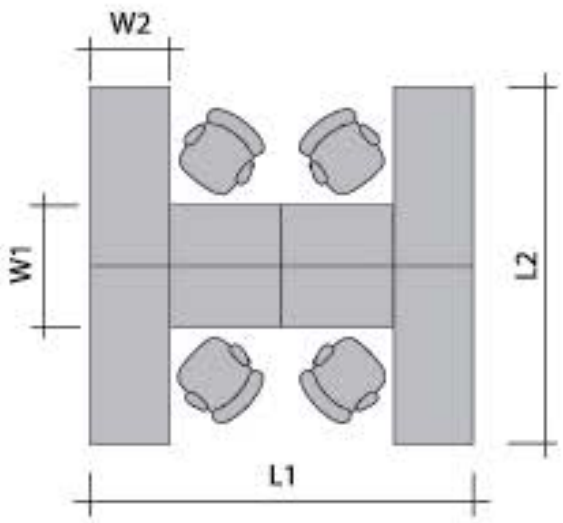

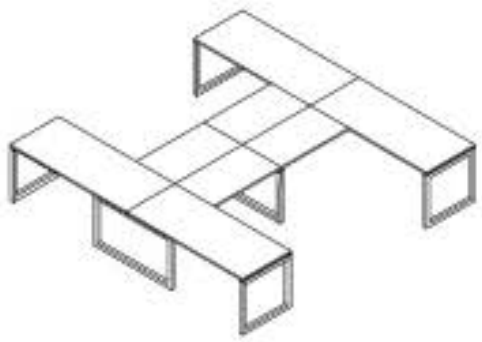

CODE	L1/W1	L2/W2	H
PF 4 - L2 B - 1616 6-7	320/120	320/70	75
PF 4 - L2 B - 1616 6-8	320/120	320/80	75
PF 4 - L2 B - 1618 6-7	320/120	360/70	75
PF 4 - L2 B - 1618 6-8	320/120	360/80	75

PLATFORM SPECIFICATION / THÔNG SỐ KỸ THUẬT BÀN HỌP **PLATFORM**

1 SQUARE TOP / BÀN VUÔNG

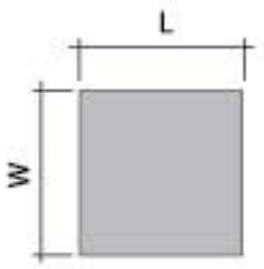

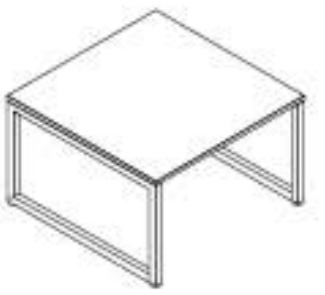

CODE	L	W	H
PF 0606 M	60	60	75
PF 0808 M	80	80	75
PF 1010 M	100	100	75
PF 1212 M	120	120	75

2 RECTANGULAR TOP / BÀN HÌNH CHỮ NHẬT

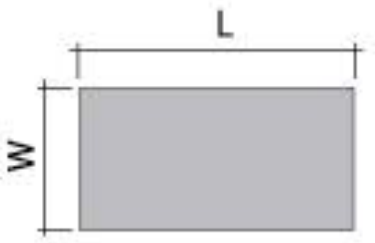

CODE	L	W	H
PF R 2010 M	200	100	75
PF R 2412 M	240	120	75

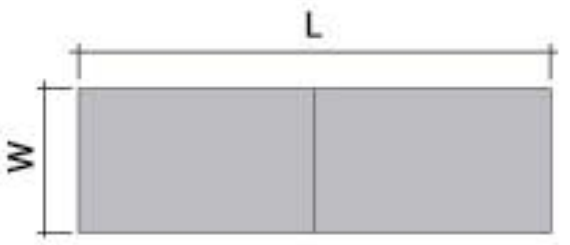

CODE	L	W	H
PF R 3612 M	360	120	75

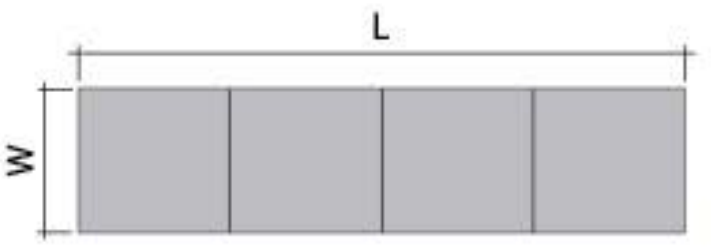

CODE	L	W	H
PF R 4816 M	480	160	75

3 OVAL TOP / BÀN HỌP HÌNH OVAL

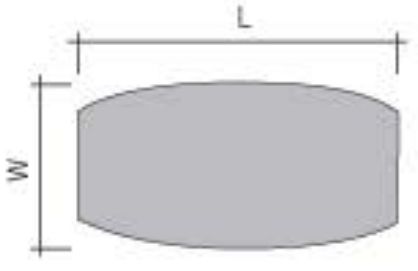

CODE	L	W	H
PF O 2412 M	240	120	75

PLATFORM SPECIFICATION / THÔNG SỐ KỸ THUẬT BÀN QUẢN LÝ **PLATFORM**

1 EXECUTIVE DESK WITH LOW CABINETS (2 LEGS) / BÀN QUẢN LÝ VỚI 1 TỦ

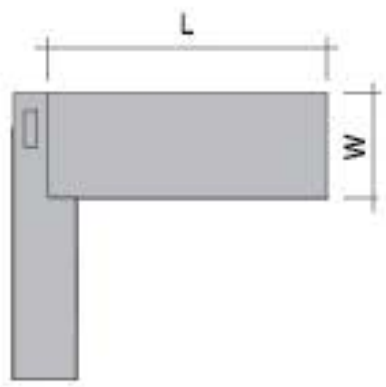

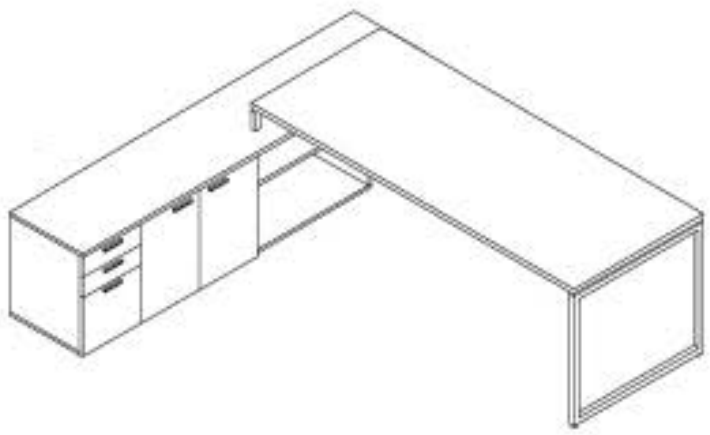

CODE	L	W	H
PF E 1807 LSC (L/R)	180	70	75
PF E 2008 LSC (L/R)	200	80	75

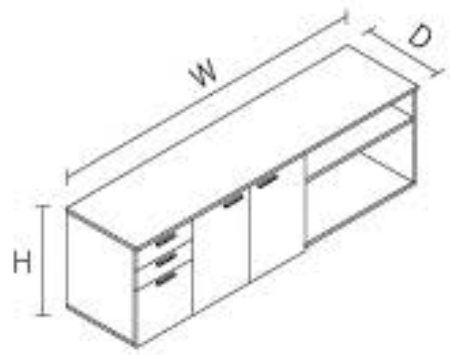

CODE	W	D	H
PF C 2045	200	50	61

FOR YOU. FOR CHANGE. FOR THE FUTURE.

Manifesto Series provide elegance and intelligent solutions for furnishing the modern executive workspace.
Its clean design with floating worktop and connecting beams give the aesthetics and great lightness with strong stability.

ACCOUNTING

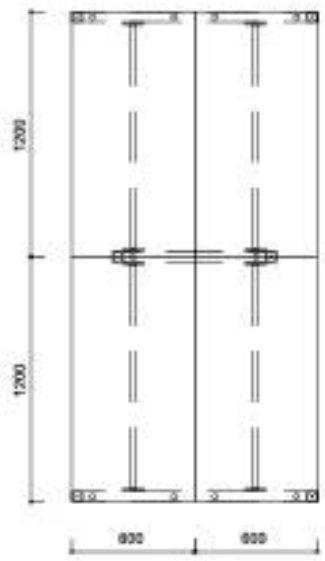

In these days, the requirements for an ergonomic office environment are increasingly rely on the flexibility and functionality of the office furniture itself. More and more organizations are looking for systems that are able to meet all needs and make work more productive.

Evolution is necessary for space and for any organization with plans for a healthy future.

Manifesto Series also can be integrated with panel based to provide more versatile and highly functional office system. Manifesto Series also can be integrated with panel based to provide more versatile and highly functional office system.

MORE SPACE WITH SHARING WORKSTATION

Based on the belief that the more people connect, the better they work, This system offer sharing concept that gives support to casual work and to provide comfort at the desk, in circulation spaces, and in group areas - all within a consistent design vocabulary.

Visually uniform and modular surfaces, storage, and seating can be configured into a broad range of settings that encourage fluid transitions between collaborative and focused work.

THE CITY

EXPAND WORK INTO 3 - DIMENSIONS

In the contemporary business life, workplace solutions help organizations to increase efficiency and productivity by supporting the management of information and effective integration of human and technological communication.

Manifesto system is designed to provide solutions for the everchanging and developing technologies and new workstyles. It gives you the opportunity to design office space according to the new needs of organizational structures. Matching the expectations of today.

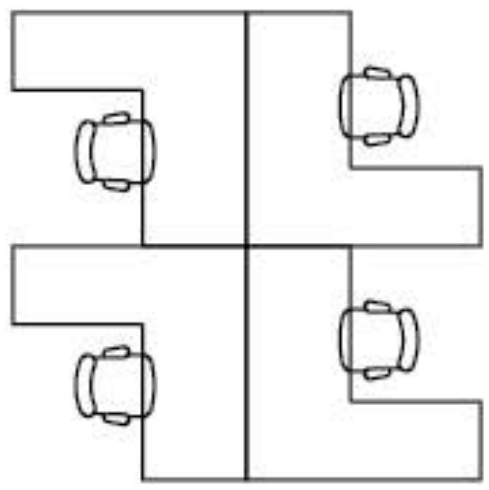

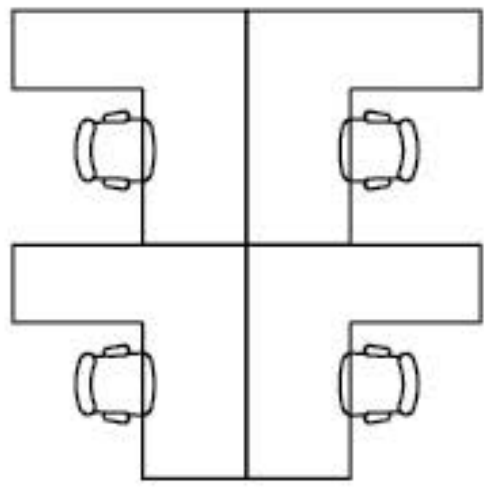

FLEXIBLE CONFIGURATION

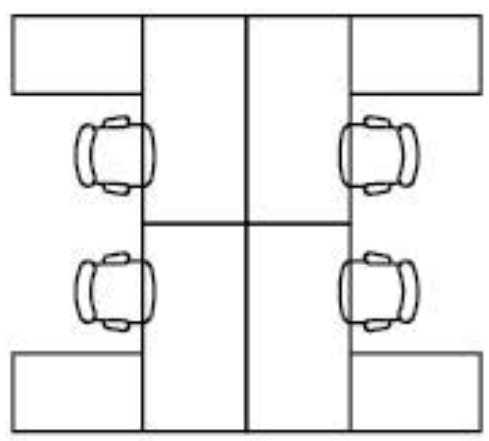

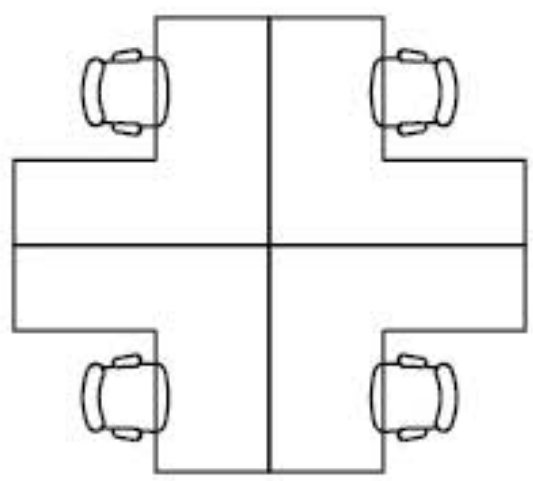

The combination of top panel with linking base system offer idea sharing workplace where you can create a basic privacy and still adapt to the modern concept of living office and allowed direct communication and sharing idea working environment.

CHANGE HAPPENS

Many business owners say managing how quickly their company grows is their biggest challenge. So it makes sense to design your office for change with a small kit of parts that easily allows for rearranging and adding on.

TABLES FAVOUR THE AGILE WAY OF WORKING

Technology and the way people work today makes a table the desktop choice for many. If all your files are electronic, who needs file drawers? Your surface is the focus, and tables give you plenty. You can push a bunch of them together for a work session. Or use one for working, then an hour later use it as a dining table, and another hour later for a conference table. Very agile, and a perfect fit for the way we work now.

A discussion is where two or a group of people get together to exchange ideas, in order to reach a decision. It is a conversation about certain topic through formal or informal debate, in order to explore solutions.

Most discussions take place in private rooms, while some informal ones are held in opened areas. Manifesto allows discussion spaces come in different sizes, features and are differently furnished to accommodate each purpose.

Different sizes and design tables for different function

A meeting room is for less formal discussions, open for any group of people and for all types of discussions. It must be ideally configured for meetings to be effective, in order to meet objectives. It is important to plan a meeting room layout that corresponds to your needs.

A boardroom is a formal executive meeting place for directors of a company or organization. The room can be utilized for lectures, presentations, negotiations or brainstorming. It has ample space for comfort and visual presentations, with built-in over-head projectors, white board, flip charts and individual power sockets.

A conference room is used to hold conferences on certain subjects, conduct workshops, make company announcements, consultation, seminar and many more. It is equipped similarly to the boardroom, with added extras such as wired or Wi-Fi internet connections and individual microphones.

Simple Discussion Table

Manifesto brings personality and versatility to multipurpose, training and conference rooms; seminar and classroom settings; and cafeteria and breakout areas. Manifesto collection offers a wide variety of tables, accessories and options including: tops in laminate or wood veneer; edges in vinyl, laminate, wood and a variety of wood edge profiles.

MANIFESTO SPECIFICATION / THÔNG SỐ KỸ THUẬT BÀN LÀM VIỆC **MANIFESTO**

1 RECTANGULAR DESKTOPS / BÀN HÌNH CHỮ NHẬT

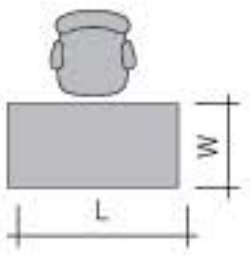

CODE	L	W	H
MT 1 - 1206	120	60	75
MT 1 - 1407	140	70	75
MT 1 - 1408	140	80	75
MT 1 - 1607	160	70	75
MT 1 - 1608	160	80	75

2 WORK BENCH 2 DESKTOPS / BÀN CỤM THẲNG 2

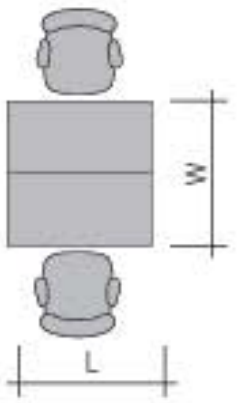

CODE	L	W	H
MT 2 - 1206	120	120	75
MT 2 - 1407	140	140	75
MT 2 - 1408	140	160	75
MT 2 - 1607	160	140	75
MT 2 - 1608	160	160	75

3 WORK BENCH 4 DESKTOPS / BÀN CỤM THẲNG 4

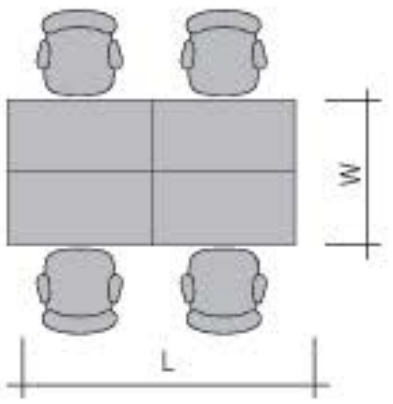

CODE	L	W	H
MT 4 - 1206	240	120	75
MT 4 - 1407	280	140	75
MT 4 - 1408	280	160	75
MT 4 - 1607	320	140	75
MT 4 - 1608	320	160	75

4 WORK BENCH 6 DESKTOPS / BÀN CỤM THẲNG 6

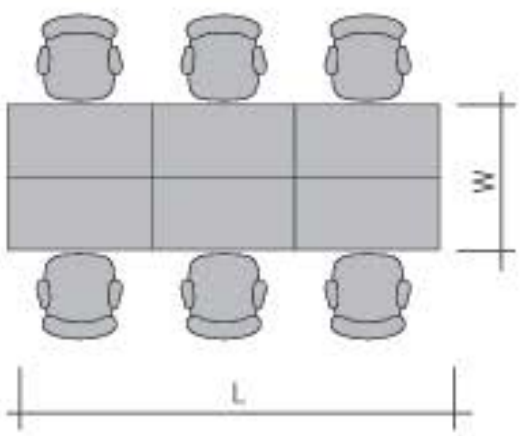

CODE	L	W	H
MT 6 - 1206	360	120	75
MT 6 - 1407	420	140	75
MT 6 - 1408	420	160	75
MT 6 - 1607	480	140	75
MT 6 - 1608	480	160	75

5 BOOMERANG GROUP DESKTOPS / BÀN CỤM 120 ĐỘ

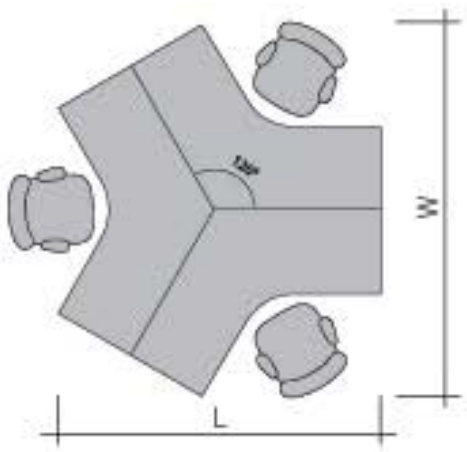

CODE	L	W	H
MT 3 - 1006	195	224	75
MT 3 - 1106	218	250	75
MT 3 - 1206	233	268	75

6 L1 - SHAPE DESKTOPS / BÀN CHỮ L1

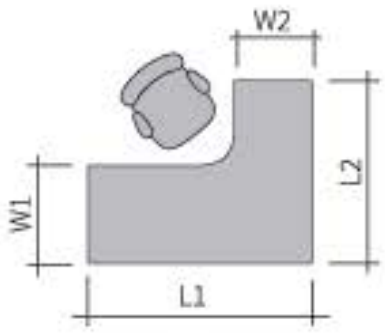

CODE	L1/W1	L2/W2	H
MT L1 - 1616 7-6 L/R	160/70	160/60	75
MT L1 - 1616 8-6 L/R	160/80	160/60	75
MT L1 - 1818 7-6 L/R	180/70	180/60	75
MT L1 - 1818 8-6 L/R	180/80	180/60	75

7 L2 - SHAPE DESKTOPS / BÀN CHỮ L2

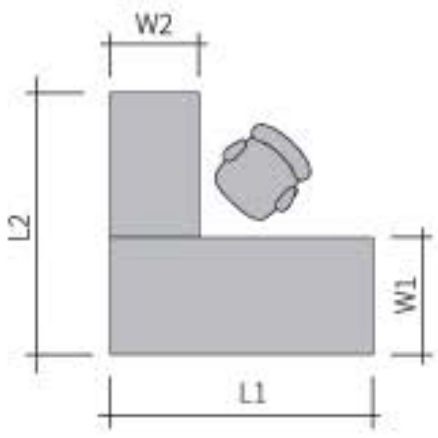

CODE	L1/W1	L2/W2	H
MT - L2 - 1616 7-6 L/R	160/70	160/60	75
MT - L2 - 1616 8-6 L/R	160/80	160/60	75
MT - L2 - 1816 7-6 L/R	180/70	160/60	75
MT - L2 - 1816 8-6 L/R	180/80	160/60	75

MANIFESTO SPECIFICATION / THÔNG SỐ KỸ THUẬT BÀN LÀM VIỆC **MANIFESTO**

1 L1 - WORK SHAPE 2 DESKTOPS / BÀN CỤM 2 DẠNG GÓC CHỮ L 1

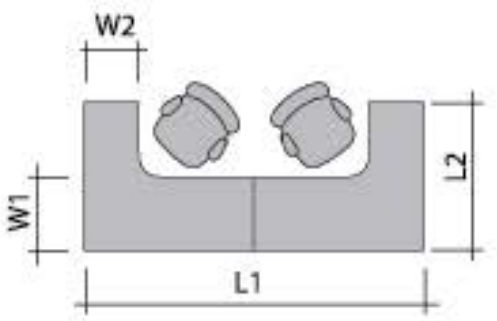

CODE	L1/W1	L2/W2	H
MT 2 - L1 - 1616 7-6	320/70	160/60	75
MT 2 - L1 - 1616 8-6	320/80	160/60	75
MT 2 - L1 - 1818 7-6	360/70	180/60	75
MT 2 - L1 - 1818 8-6	360/80	180/80	75

2 L1 - WORK SHAPE 4 DESKTOPS / BÀN CỤM 4 DẠNG GÓC CHỮ L 1

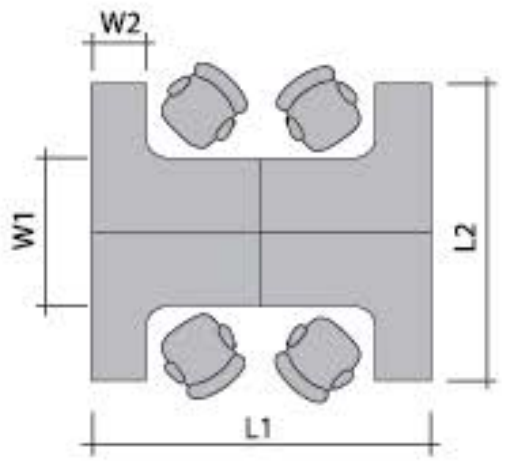

CODE	L1/W1	L2/W2	H
MA 4 - L1 - 1616 7-6	320/140	320/60	75
MA 4 - L1 - 1616 8-6	320/160	320/60	75
MA 4 - L1 - 1818 7-6	360/140	360/60	75
MA 4 - L1 - 1818 8-6	360/160	360/60	75

3 L1 - WORK SHAPE 4 DESKTOPS WITH DRAWER / BÀN CỤM 4 DẠNG GÓC CHỮ L 1 CÓ TỦ

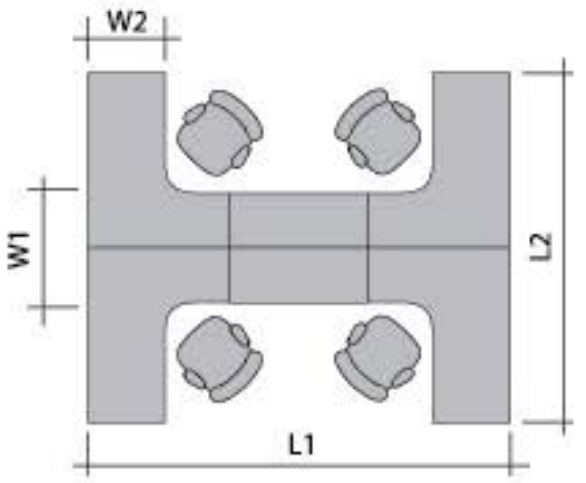

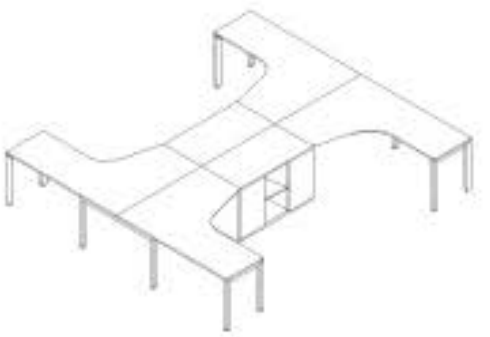

CODE	L1/W1	L2/W2	H
MT 4B - L1D - 3616 5-7	360/100	320/70	75
MT 4B - L1D - 3616 5-8	360/100	320/80	75
MT 4B - L1D - 3618 5-7	360/100	320/70	75
MT 4B - L1D - 3618 5-7	360/100	320/80	75

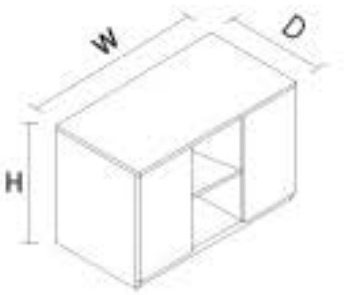

CODE	W	D	H
MT C 1206	120	50	75

4 L2 - WORK SHAPE 2 DESKTOPS / BÀN CỤM 2 DẠNG GÓC CHỮ L 2

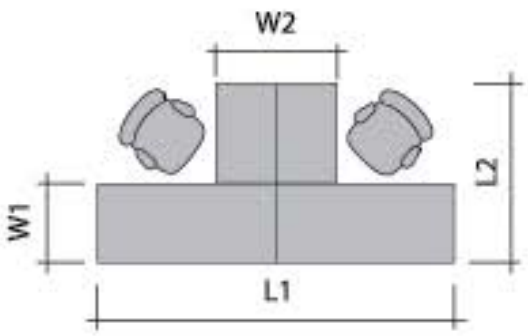

CODE	L1/W1	L2/W2	H
MT 2 - L2 - 1616 7-6	320/70	160/120	75
MT 2 - L2 - 1616 8-6	320/80	160/120	75
MT 2 - L2 - 1816 7-6	360/70	160/120	75
MT 2 - L2 - 1816 8-6	360/80	160/120	75

5 L2 - WORK SHAPE 4 DESKTOPS (SIDE BY SIDE) / BÀN CỤM 4 DẠNG GÓC CHỮ L 2 (MẶT ĐỐI MẶT)

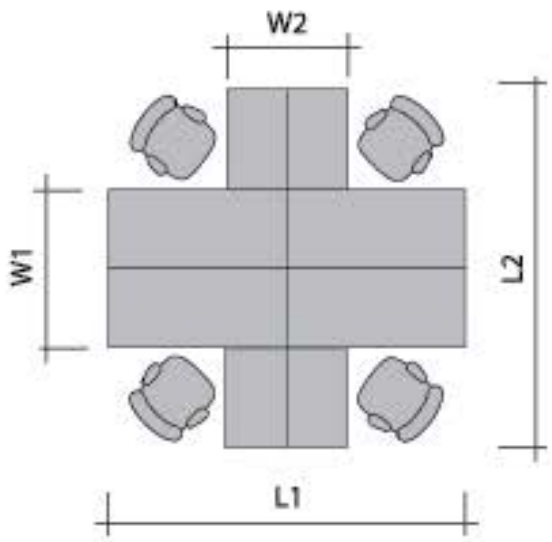

CODE	L1/W1	L2/W2	H
MT 4 - L2 S - 1616 7-6	320/140	320/120	75
MT 4 - L2 S - 1616 8-6	320/160	320/120	75
MT 4 - L2 S - 1816 7-6	360/140	320/120	75
MT 4 - L2 S - 1816 8-6	360/160	320/120	75

6 L2 - WORK SHAPE 4 DESKTOPS (BACK TO BACK) / BÀN CỤM 4 DẠNG GÓC CHỮ L 2 (LƯNG ĐỐI LƯNG)

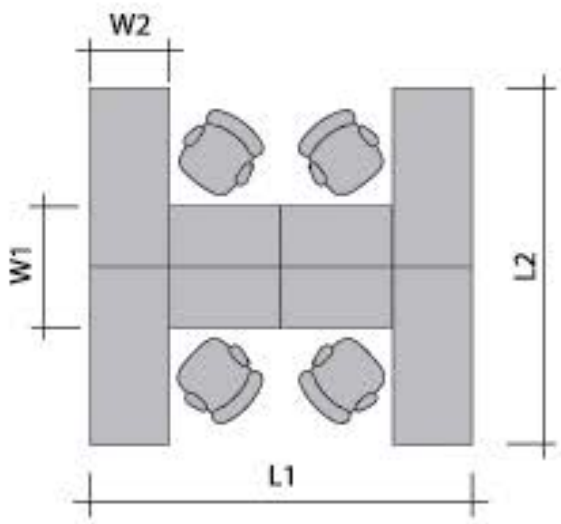

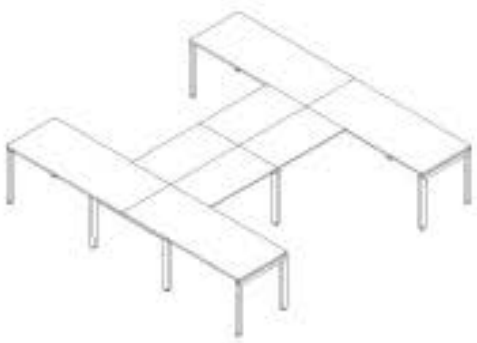

CODE	L1/W1	L2/W2	H
MT 4 - L2 B - 1616 6-7	320/120	320/70	75
MT 4 - L2 B - 1616 6-8	320/120	320/80	75
MT 4 - L2 B - 1618 6-7	320/120	360/70	75
MT 4 - L2 B - 1618 6-8	320/120	360/80	75

MANIFESTO SPECIFICATION / THÔNG SỐ KỸ THUẬT BÀN HỌP **MANIFESTO**

1 SQUARE TOP / BÀN VUÔNG

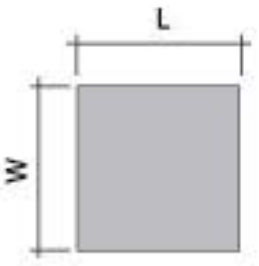

CODE	L	W	H
MT 0606 M	60	60	75
MT 0808 M	80	80	75
MT 1010 M	100	100	75
MT 1212 M	120	120	75

2 RECTANGULAR TOP / BÀN HÌNH CHỮ NHẬT

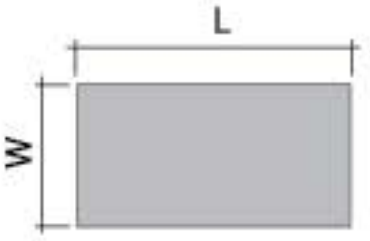

CODE	L	W	H
MT 2010 M	200	100	75
MT 2412 M	240	120	75

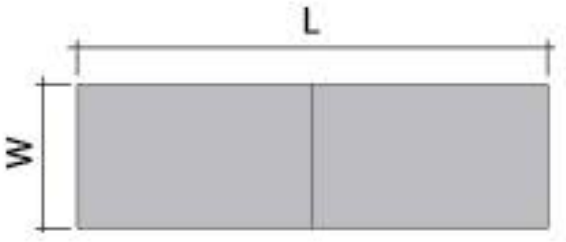

CODE	L	W	H
MT R 4012 M	400	120	75

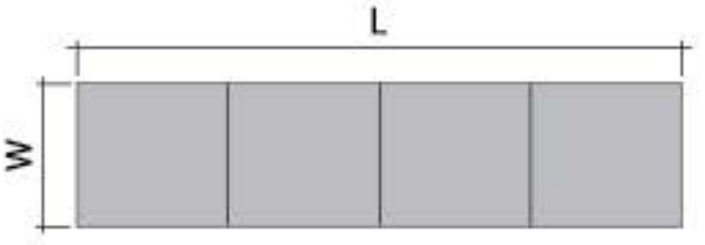

CODE	L	W	H
MT R 4816 M	480	160	75

3 BREAK OUT / BÀN QUẦY BAR

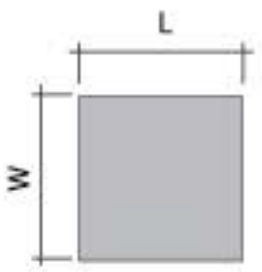

CODE	L	W	H
MT 0606 M BO	60	60	110

MANIFESTO SPECIFICATION / THÔNG SỐ KỸ THUẬT BÀN QUẢN LÝ **MANIFESTO**

1 EXECUTIVE DESK SIDE DRAWER CABINETS (3 LEGS) / BÀN QUẢN LÝ VỚI 1 TỦ

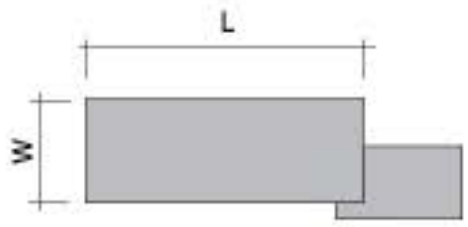

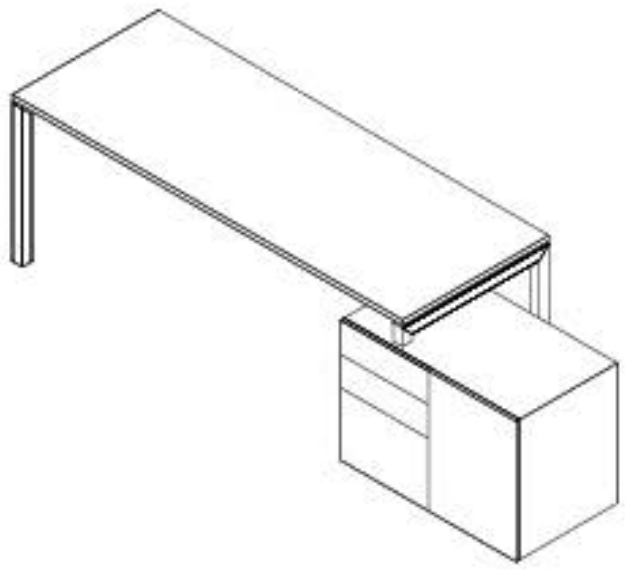

CODE	L	W	H
MT D 1807 3SC (L/R)	180	70	75
MT D 2008 3SC (L/R)	200	80	75

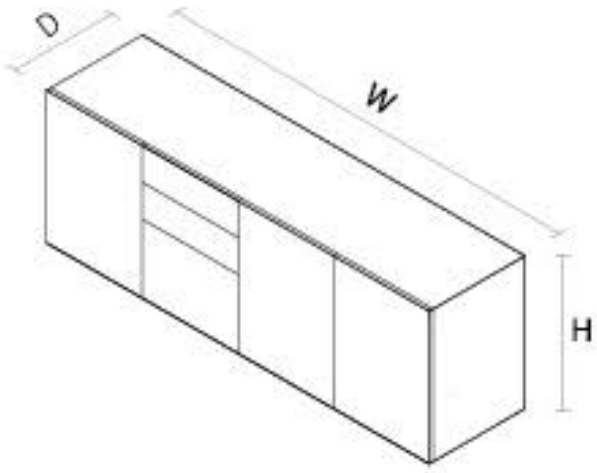

CODE	W	D	H
MT C 4 18045	180	50	61

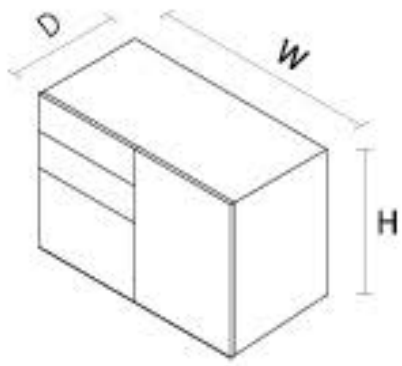

CODE	W	D	H
MT C 2 0905	90	50	61

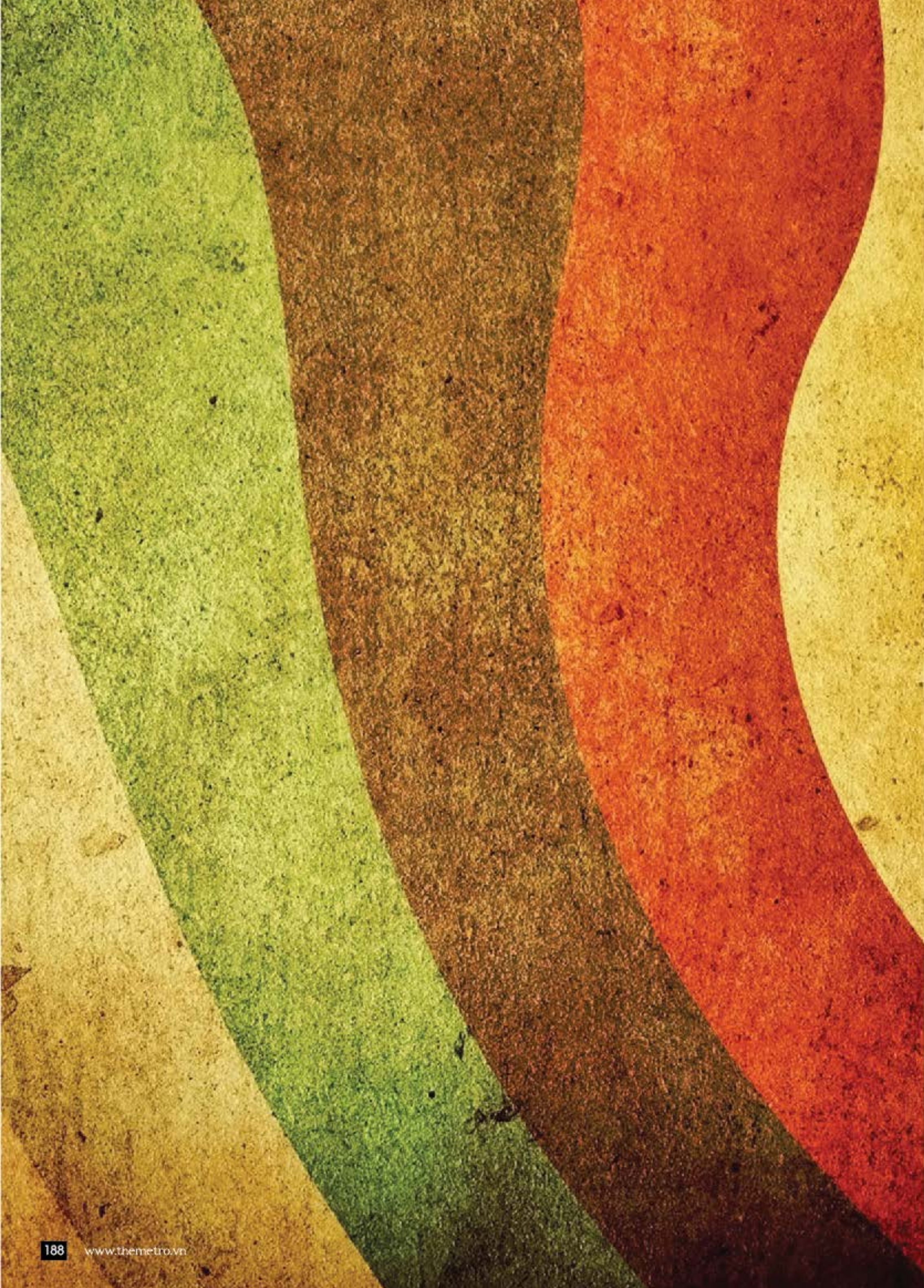

TWO HEADS ARE BETTER THAN ONE

Research shows several people working together make decisions that outperform those of people working alone. Tables - on wheels, that fold down for storing and fold up in seconds - are a flexible way to put two heads together.

BELLO Series

The perfect combination of Function and Aesthetic

Here is the desk designed with a clean, simple and clear elements, that still manage to add a powerful character on it. The minimalist style stand out to be absolute elegance, which bringing nonstyle disegn become an aspect of flexible design that goes beyond time.

Bello is a workstation that stands out in a crowd and well equipped with tones of features. The numerour possibilities for modular features is extremely welcome in any workplace, while creative cable management systam with added technology is the strength lies in it.

Bello gives you the power to organize your desk space with elegance as well as effciency. Arranging your office in the best way is important, but it's not always easy. Being able to choose from so many solutions make it easy and fun to optimize your space.

Bello provides an outstanding appearance for outstanding personalities. They set a strong benchmarks in design, and provide orientation with it dear structures and straight line.

You can't go wrong with Bello. Straightforward design and a consistantly of uniform furmishing concept offer you a miltitude individual and creative design possibilities. Thus, every single member of staff's office quite individually, but yet your office still recognizably uniform.

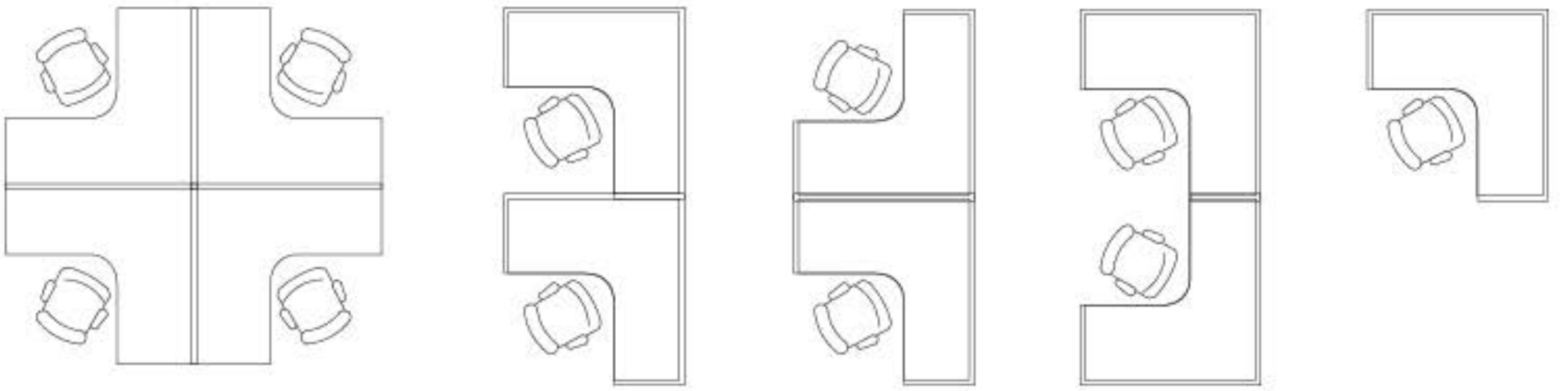

Communication with colleagues are just important as sufficient peace for concentrated solo work. Bello tunes it self perfectly.

Each colleagues connected closely in a duster, while the divider screen create a perfect visual separation when required. Thus, everyone works together and yet on their own.

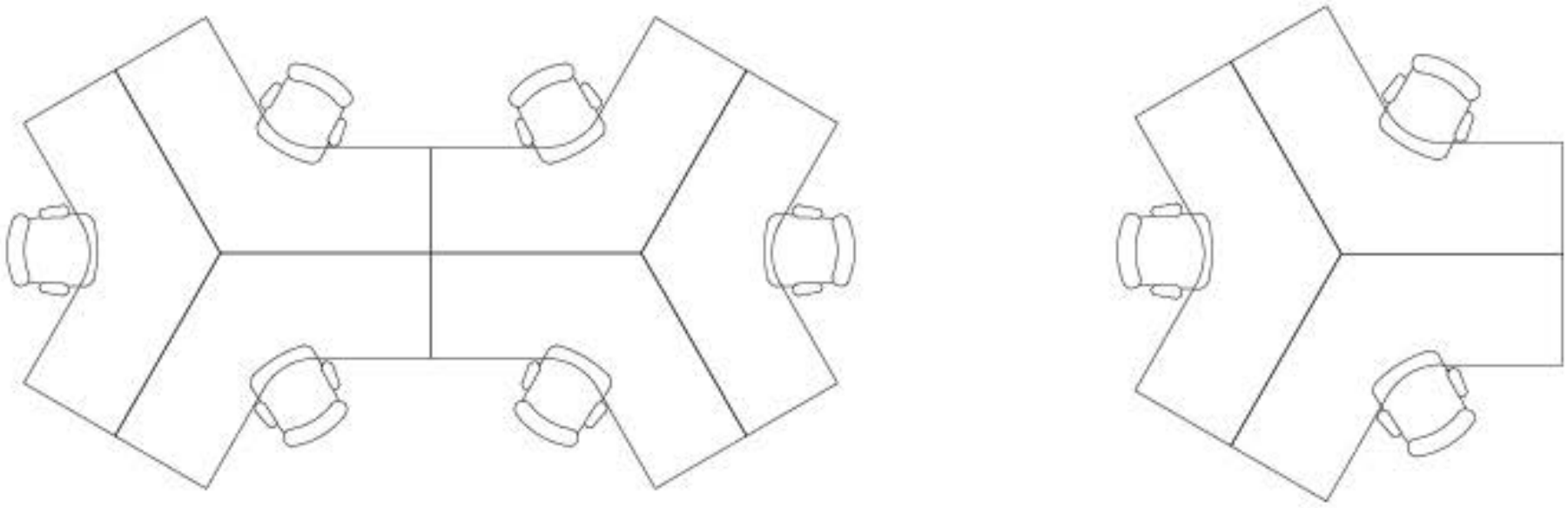

BELLO SPECIFICATION / THÔNG SỐ KỸ THUẬT BÀN LÀM VIỆC **BELLO**

1 RECTANGULAR DESK / BÀN HÌNH CHỮ NHẬT

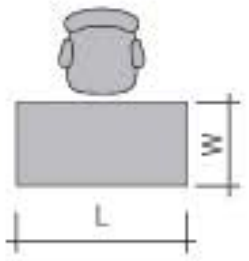

CODE	L	W	H
BE 1 - 1407	140	70	75
BE 1 - 1408	140	80	75
BE 1 - 1607	160	70	75
BE 1 - 1608	160	80	75

2 WORK BENCH 2 DESKTOPS / BÀN CỤM THẲNG 2

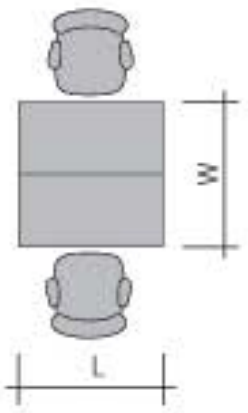

CODE	L	W	H
BE 2 - 1407	140	140	75
BE 2 - 1408	140	160	75
BE 2 - 1607	160	140	75
BE 2 - 1608	160	160	75

3 WORK BENCH 4 DESKTOPS / BÀN CỤM THẲNG 4

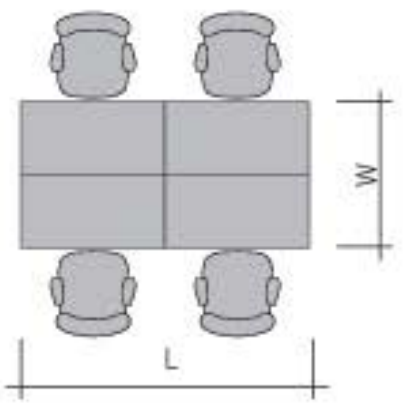

CODE	L	W	H
BE 4 - 1407	280	140	75
BE 4 - 1408	280	160	75
BE 4 - 1607	320	140	75
BE 4 - 1608	320	160	75

4 WORK BENCH 6 DESKTOPS / BÀN CỤM THẲNG 6

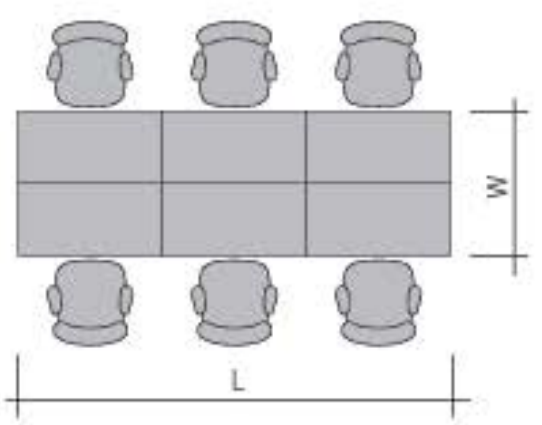

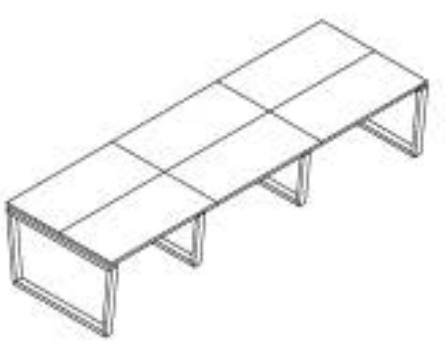

CODE	L	W	H
BE 6 - 1407	420	140	75
BE 6 - 1408	420	160	75
BE 6 - 1607	480	140	75
BE 6 - 1608	480	160	75

5 BOOMERANG GROUP DESK / BÀN CỤM 120 ĐỘ

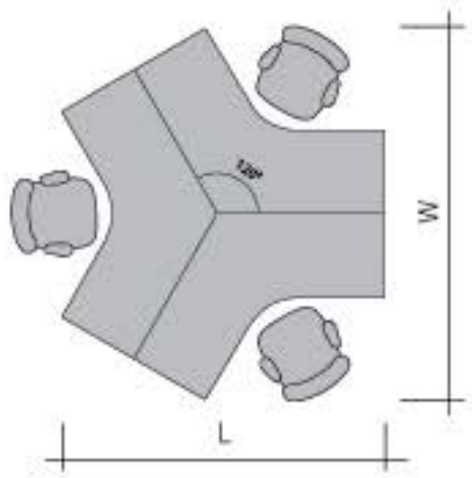

CODE	L	W	H
BE 3 - 10 - 1005	195	224	75
BE 3 - 11 - 1106	218	250	75
BE 3 - 12 - 1206	233	268	75

6 L1 - SHAPE DESK / BÀN CHỮ L 1

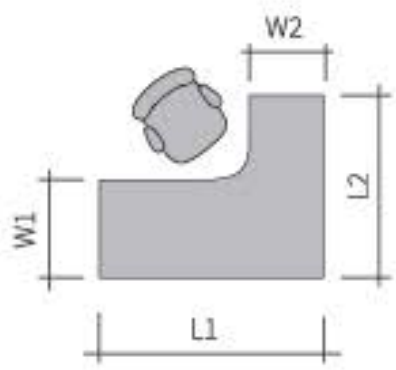

CODE	L1/W1	L2/W2	H
BE - L1 - 1616 7-6 L/R	160/70	160/60	75
BE - L1 - 1616 8-6 L/R	160/80	160/60	75
BE - L1 - 1818 7-6 L/R	180/70	180/60	75
BE - L1 - 1818 8-6 L/R	180/80	180/60	75

7 L2 - SHAPE DESK / BÀN CHỮ L 2

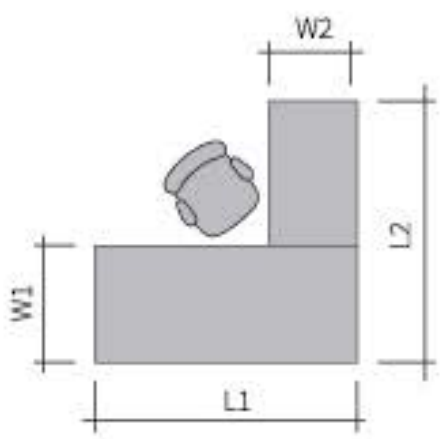

CODE	L1/W1	L2/W2	H
BE - L2 - 1616 7-6 L/R	160/70	160/60	75
BE - L2 - 1616 8-6 L/R	160/80	160/60	75
BE - L2 - 1816 7-6 L/R	180/70	160/60	75
BE - L2 - 1816 8-6 L/R	180/80	160/60	75

BELLO SPECIFICATION / THÔNG SỐ KỸ THUẬT BÀN LÀM VIỆC **BELLO**

1 L1 - WORK SHAPE 2 DESK / BÀN CỤM 2 DẠNG GÓC CHỮ L 1

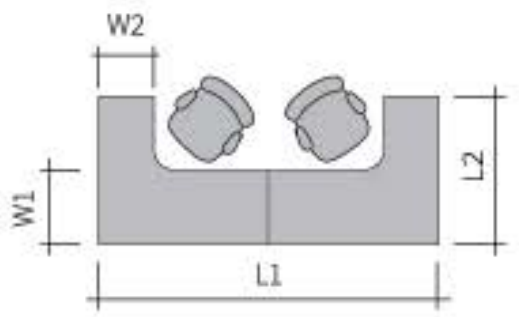

CODE	L1/W1	L2/W2	H
BE 2 - L1 - 1616 7-6 L/R	320/70	160/60	75
BE 2 - L1 - 1616 8-6 L/R	320/80	160/60	75
BE 2 - L1 - 1818 7-6 L/R	360/70	180/60	75
BE 2 - L1 - 1818 8-6 L/R	360/80	180/60	75

- Chỉ áp dụng cho khổ ván: 1.830 mm x 2.440 mm.

2 L1 - WORK SHAPE 4 DESK / BÀN CỤM 4 DẠNG GÓC CHỮ L 1

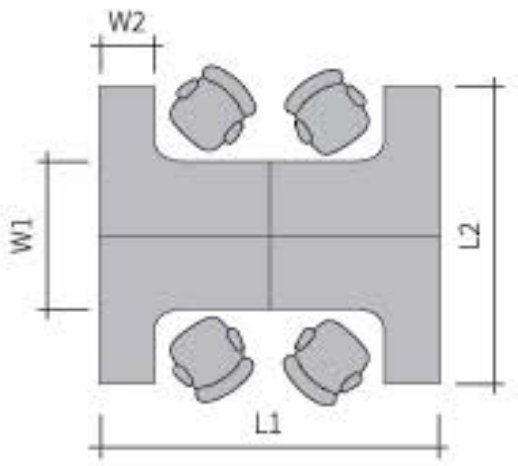

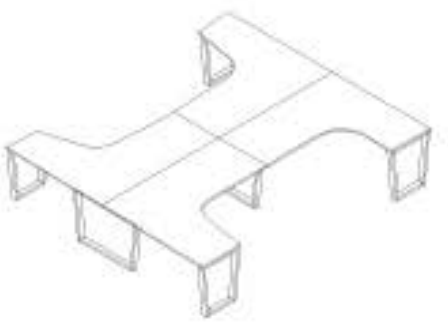

CODE	L1/W1	L2/W2	H
BE 4B - L1 - 1612 7-6 L/R	320/140	240/60	75
BE 4B - L1 - 1612 8-6 L/R	320/160	240/60	75
BE 4B - L1 - 1812 7-6 L/R	360/140	240/60	75
BE 4B - L1 - 1812 8-6 L/R	360/160	240/60	75

- Chỉ áp dụng cho khổ ván: 1.830 mm x 2.440 mm.

3 L1 - WORK SHAPE 4 DESK WITH DRAWER / BÀN CỤM 4 CÓ TỦ

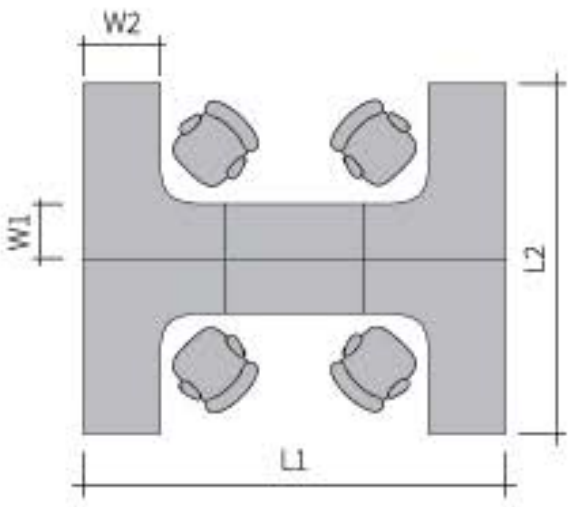

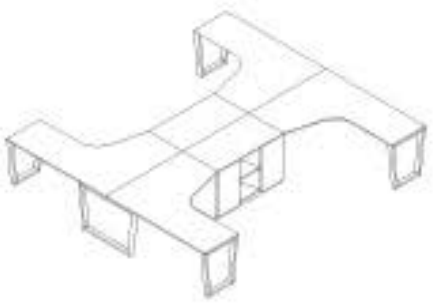

CODE	L1/W1	L2/W2	H
BE 4B - L1D - 3616 6-7 L/R	360/100	320/70	75
BE 4B - L1D - 3616 6-8 L/R	360/100	320/80	75
BE 4B - L1D - 3618 6-7 L/R	360/100	360/70	75
BE 4B - L1D - 3618 6-8 L/R	360/100	360/80	75

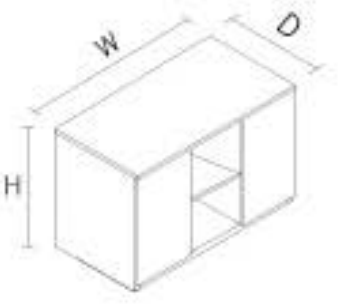

CODE	W	D	H
SO C 1206	120	50	75

4 L2 - WORK SHAPE 2 DESK / BÀN CỤM 2 DẠNG GÓC CHỮ L 2

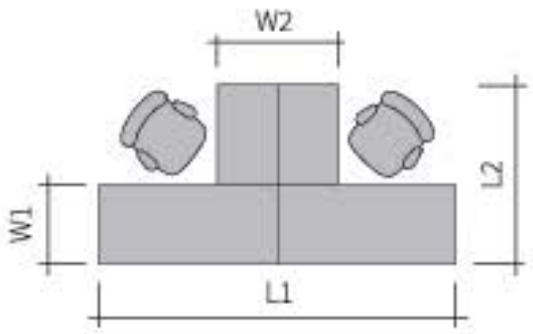

CODE	L1/W1	L2/W2	H
BE 2 - L2 - 1616 7-6 L/R	320/70	160/60	75
BE 2 - L2 - 1616 8-6 L/R	320/80	160/60	75
BE 2 - L2 - 1816 7-6 L/R	360/70	160/60	75
BE 2 - L2 - 1816 8-6 L/R	360/80	160/60	75

5 L2 - WORK SHAPE 4 DESK (SIDE BY SIDE) / BÀN CỤM 4 DẠNG GÓC CHỮ L 2 (MẶT ĐỐI MẶT)

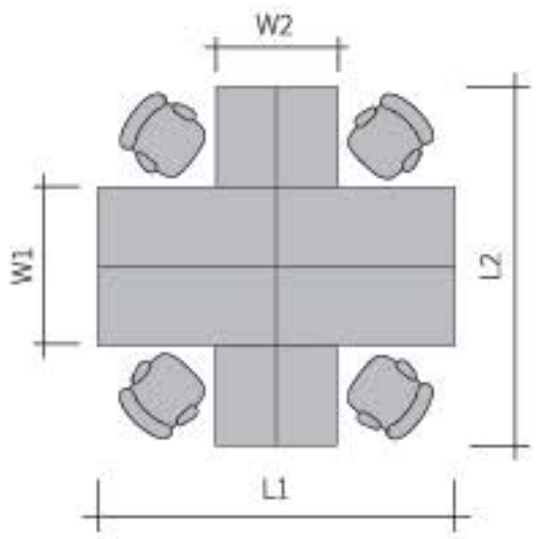

CODE	L1/W1	L2/W2	H
BE 4 - L2 S - 1616 7-6 L/R	320/140	320/120	75
BE 4 - L2 S - 1616 8-6 L/R	320/160	320/120	75
BE 4 - L2 S - 1816 7-6 L/R	360/140	320/120	75
BE 4 - L2 S - 1816 8-6 L/R	360/160	320/120	75

6 L2 - WORK SHAPE 4 DESK (BACK TO BACK) / BÀN CỤM 4 DẠNG GÓC CHỮ L 2 (LƯNG ĐỐI LƯNG)

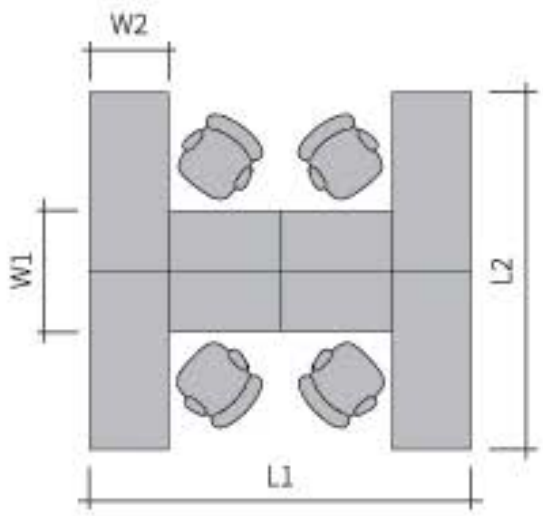

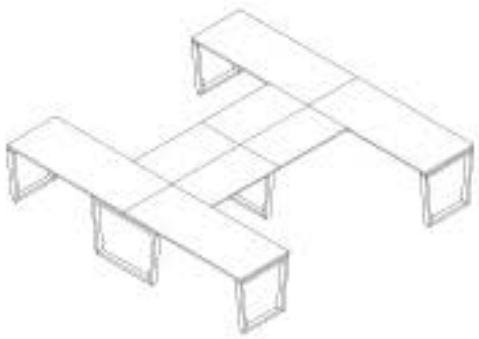

CODE	L1/W1	L2/W2	H
BE 4 - L2 B - 1616 6-7 L/R	320/120	320/70	75
BE 4 - L2 B - 1616 6-8 L/R	320/120	320/80	75
BE 4 - L2 B - 1618 6-7 L/R	320/120	360/70	75
BE 4 - L2 B - 1618 6-8 L/R	320/120	360/80	75

500

BELLO SPECIFICATION / THÔNG SỐ KỸ THUẬT BÀN HỌP **BELLO**

1 SQUARE TOP / BÀN HỌP VUÔNG

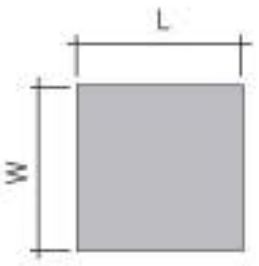

CODE	L	W	H
BE 0606 M	60	60	75
BE 0808 M	80	80	75
BE 1010 M	100	100	75
BE 1212 M	120	120	75

2 RECTANGULAR TABLE / BÀN HỌP HÌNH CHỮ NHẬT

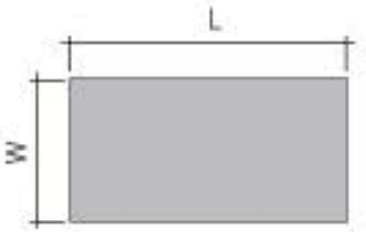

CODE	L	W	H
BE R 2010 M	200	100	75
BE R 2412 M	240	120	75

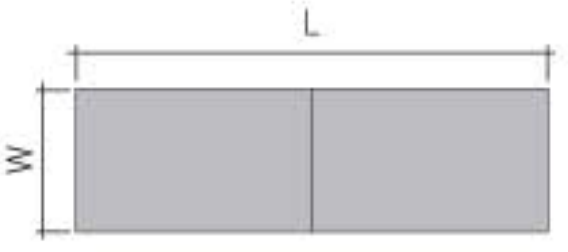

CODE	L	W	H
BE R 4012 M	400	120	75

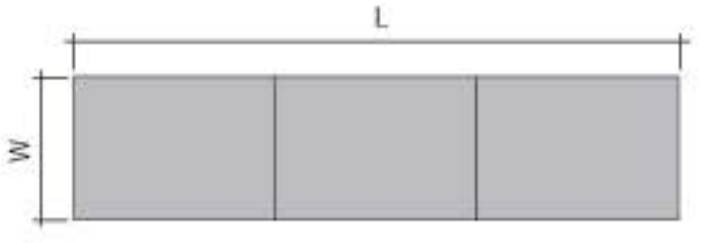

CODE	L	W	H
BE R 4812 M	480	120	75
BE R 6012 M	600	120	75

3 ROUNDED RECTANGULAR TOP / BÀN HỌP HÌNH CHỮ NHẬT BO GÓC

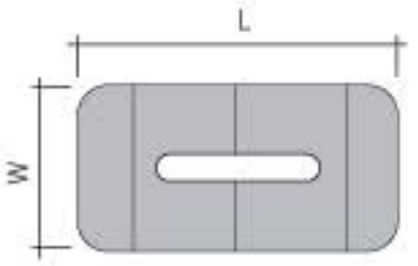

CODE	L	W	H
BE RR 4818 M	480	180	75

4 OVAL TOP / BÀN HỌP HÌNH OVAL

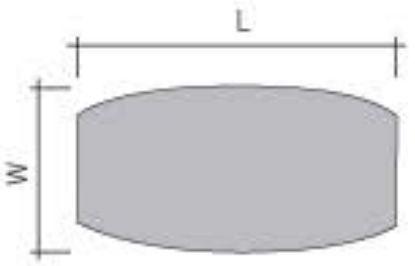

CODE	L	W	H
BE O 2412 M	240	120	75

BELLO SPECIFICATION / THÔNG SỐ KỸ THUẬT BÀN QUẢN LÝ **BELLO**

1 EXECUTIVE DESK WITH LOW CABINETS / BÀN QUẢN LÝ VỚI 1 TỦ

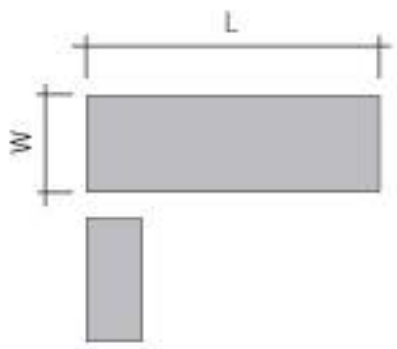

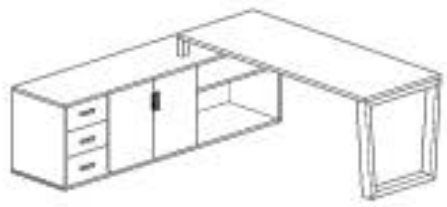

CODE	L	W	H
BE D 1807 LSC (L/R)	180	70	75
BE D 2008 LSC (L/R)	200	80	75

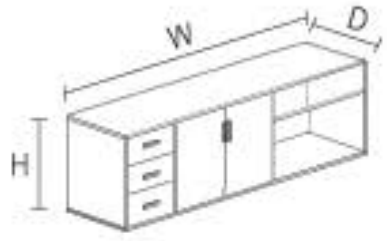

CODE	W	D	H
BE C 3 1345	135	50	61

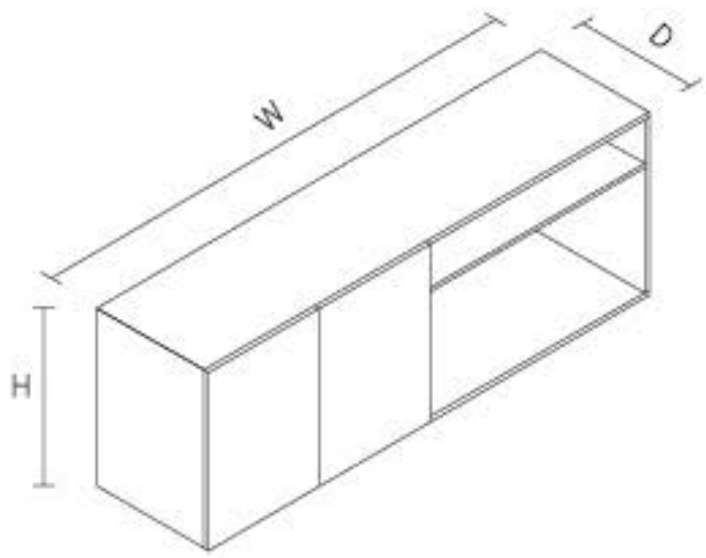

CODE	W	D	H
SO CO 2 18045	180	50	61

Whether day by day office activities involve discussions, interactions, idea-sharing, and networking, Sonic system offers the element of multi-configurations through its simple installation process without forgo stability and sturdiness of the system at a reasonable price.

Sonic takes on the complexity of office furnishings using simple, multipurpose elements that provide efficient and functional solutions for complex configuration needs. The flexibility of the system makes it possible to modify even the simplest configurations, integrating them with straight or shaped desktops using an efficient system involving shared structural components.

SONIC SERIES

A Place For Everything, Everything In Its Place

SONIC MEETING TABLE

Meeting table is essential for every office where you will allow a discussion or a group of people get together to exchange ideas, in order to reach a decision. It is important for a decision to be made about certain topic through formal or informal debate, in order to explore solutions.

Sonic can be connected and configure as straight table as individual or multiple, diverse of meeting table or conference bench, general workstation bench, or executive desk with side return, or even discussion table. It becomes the base structure element and complement with accessories from diciding screens, storages for your work tools, power and data cable management.

Sonic system is developed based on the attributed guidelines and benefits to be and outstanding, trendy, and user friendly system for the office environment.

Sonic involved minimum components; simplified in design concept; maximum utilization of components; highly re-configurable; sleek and clean-cut; approachable installation techniques; multiple accessories attachment support for effective desktop management.

12
9
3
6

SONIC SPECIFICATION / THÔNG SỐ KỸ THUẬT BÀN LÀM VIỆC **SONIC**

1 RECTANGULAR DESKTOPS / BÀN HÌNH CHỮ NHẬT

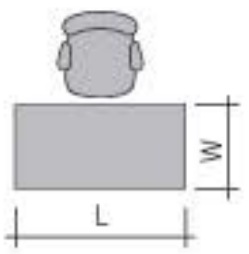

CODE	L	W	H
SN 1 - 1206	120	60	75
SN 1 - 1407	140	70	75
SN 1 - 1607	160	70	75
SN 1 - 1608	160	80	75

2 WORK BENCH 2 DESKTOPS / BÀN CỤM THẲNG 2

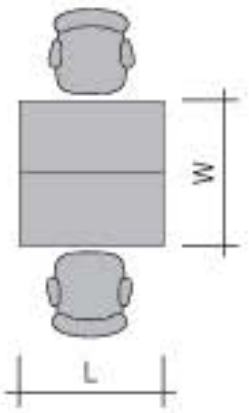

CODE	L	W	H
SN 2 - 1206	120	120	75
SN 2 - 1407	140	140	75
SN 2 - 1408	140	160	75
SN 2 - 1607	160	140	75
SN 2 - 1608	160	160	75

3 WORK BENCH 4 DESKTOPS / BÀN CỤM THẲNG 4

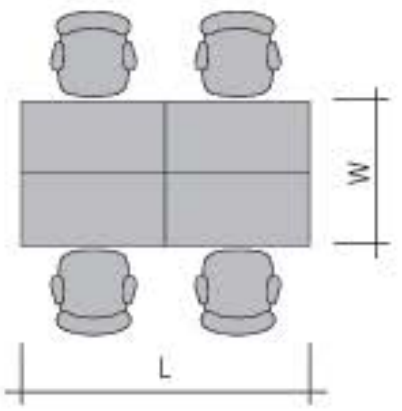

CODE	L	W	H
SN 4 - 1206	240	120	75
SN 4 - 1407	280	140	75
SN 4 - 1408	280	160	75
SN 4 - 1607	320	140	75
SN 4 - 1608	320	160	75

4 WORK BENCH 6 DESKTOPS / BÀN CỤM THẲNG 6

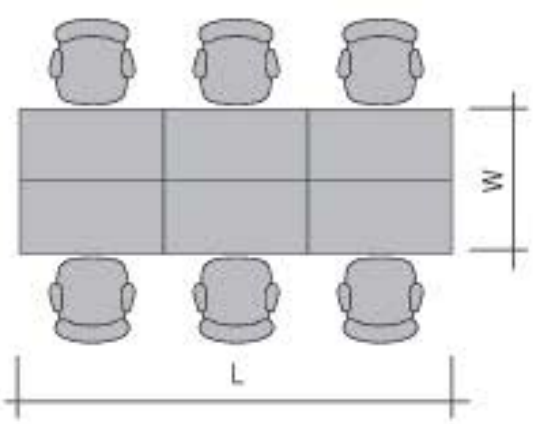

CODE	L	W	H
SN 6 - 1206	360	120	75
SN 6 - 1407	420	140	75
SN 6 - 1408	420	160	75
SN 6 - 1607	480	140	75
SN 6 - 1608	480	160	75

5 BOOMERANG GROUP DESKTOPS / BÀN CỤM 120 ĐỘ

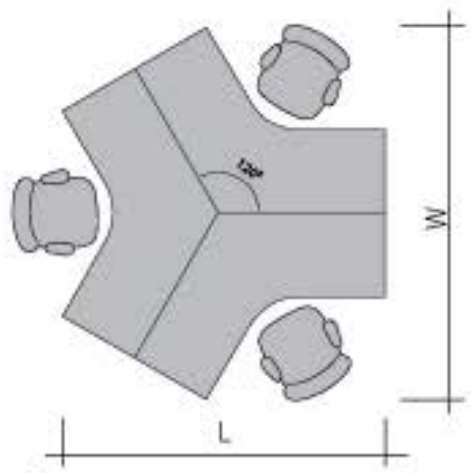

CODE	L	W	H
SN 3 - 10 - 1005	195	224	75
SN 3 - 11 - 1006	218	250	75
SN 3 - 12 - 1206	233	268	75

6 L1 - SHAPE DESKTOPS / BÀN CHỮ L 1

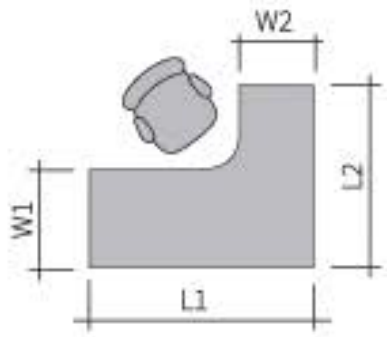

CODE	L1/W1	L2/W2	H
SN - L1 - 1616 7-6 L/R	160/70	160/60	75
SN - L1 - 1616 8-6 L/R	160/80	160/60	75
SN - L1 - 1818 7-6 L/R	180/70	180/60	75
SN - L1 - 1818 8-6 L/R	180/80	180/60	75

7 L2 - SHAPE DESKTOPS / BÀN CHỮ L 2

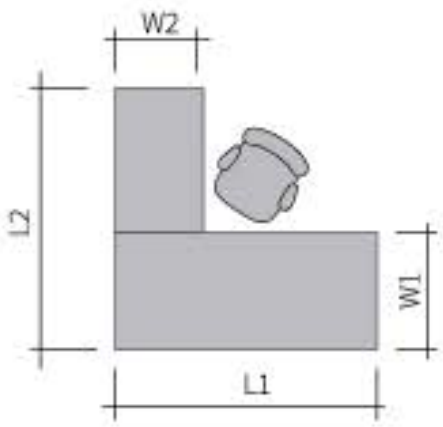

CODE	L1/W1	L2/W2	H
SN - L2 - 1616 7-6 L/R	160/70	160/60	75
SN - L2 - 1616 8-6 L/R	160/80	160/60	75
SN - L2 - 1816 7-6 L/R	180/70	160/60	75
SN - L2 - 1816 8-6 L/R	180/80	160/60	75

SONIC SPECITFICATION / THÔNG SỐ KỸ THUẬT BÀN LÀM VIỆC **SONIC**

1 L1 - WORK SHAPE 2 DESK / BÀN CỤM 2 DẠNG GÓC CHỮ L 1

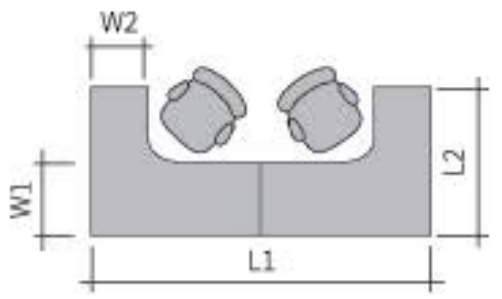

CODE	L1/W1	L2/W2	H
SN 2 - L1 - 1616 7-6	320/70	160/60	75
SN 2 - L1 - 1616 8-6	320/80	160/60	75
SN 2 - L1 - 1818 7-6	360/70	180/60	75
SN 2 - L1 - 1818 8-6	360/80	180/60	75

* Chỉ áp dụng cho khổ ván: 1.830 mm x 2.440 mm.

2 L1 - WORK SHAPE 4 DESK / BÀN CỤM 4 DẠNG GÓC CHỮ L 1

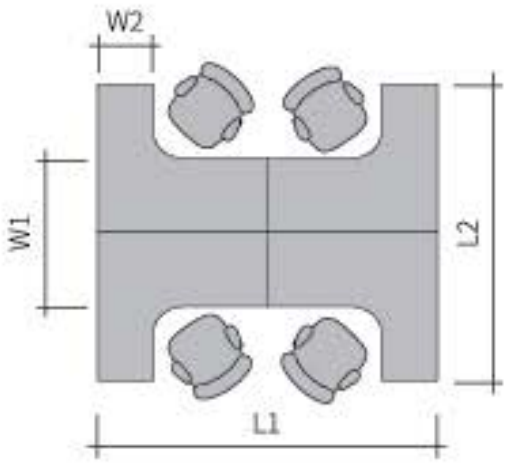

CODE	L1/W1	L2/W2	H
SN 4B - L1 - 1616 7-6	320/140	320/60	75
SN 4B - L1 - 1616 8-6	320/160	320/60	75
SN 4B - L1 - 1818 7-6	360/140	360/60	75
SN 4B - L1 - 1818 8-6	360/160	360/60	75

* Chỉ áp dụng cho khổ ván: 1.830 mm x 2.440 mm.

3 L1 - WORK SHAPE 4 DESK WITH DRAWER / BÀN CỤM 4 DẠNG GÓC CHỮ L 1 CÓ TỦ

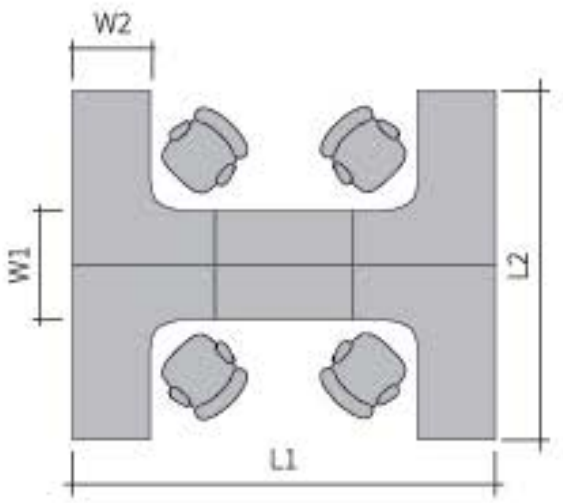

CODE	L1/W1	L2/W2	H
SO 4B - L1D - 3616 5-7	360/100	320/70	75
SO 4B - L1D - 3616 5-8	360/100	320/80	75
SO 4B - L1D - 3618 5-7	360/100	360/70	75
SO 4B - L1D - 3618 5-8	360/100	360/80	75

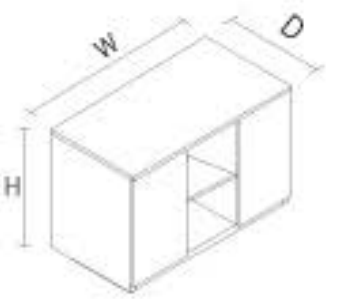

CODE	W	D	H
SN C 1206	120	60	75

4 L2 - WORK SHAPE 2 DESK / BÀN CỤM 2 DẠNG GÓC CHỮ L 2

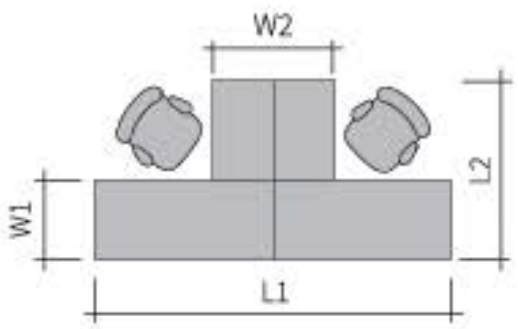

CODE	L1/W1	L2/W2	H
SN 2 - L2 1616 7-6	320/70	160/120	75
SN 2 - L2 1616 7-6	320/80	160/120	75
SN 2 - L2 1616 7-6	320/70	160/120	75
SN 2 - L2 1616 7-6	320/80	160/120	75

5 L2 - WORK SHAPE 4 DESK (SIDE BY SIDE) / BÀN CỤM 4 DẠNG GÓC CHỮ L 2 (MẶT ĐỐI MẶT)

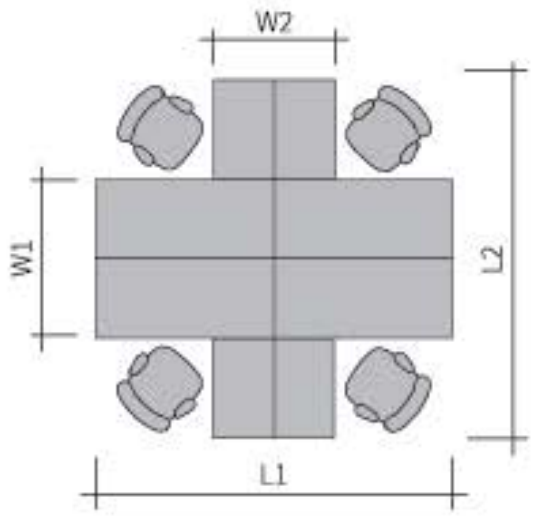

CODE	L1/W1	L2/W2	H
SN 4 - L2 S - 1616 7-6	320/140	320/120	75
SN 4 - L2 S - 1616 8-6	320/160	320/120	75
SN 4 - L2 S - 1816 7-6	360/140	320/120	75
SN 4 - L2 S - 1816 8-6	360/160	320/120	75

6 L2 - WORK SHAPE 4 DESK (BACK TO BACK) / BÀN CỤM 4 DẠNG GÓC CHỮ L 2 (LƯNG ĐỐI LƯNG)

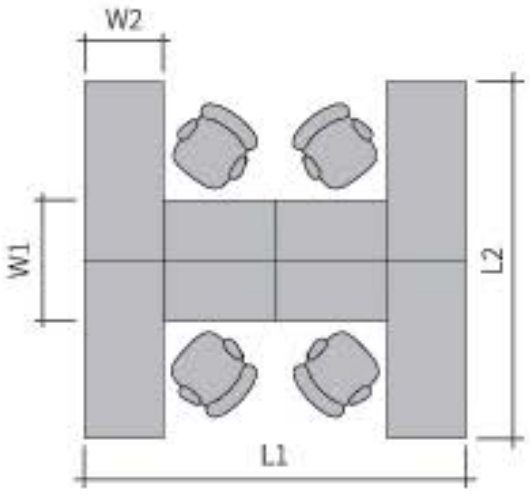

CODE	L1/W1	L2/W2	H
SN 4 - L2 B 1616 6-7	320/120	320/70	75
SN 4 - L2 B 1616 6-8	320/120	320/80	75
SN 4 - L2 B 1618 6-7	320/120	360/70	75
SN 4 - L2 B 1618 6-8	320/120	360/80	75

SONIC SPECIFICATION / THÔNG SỐ KỸ THUẬT BÀN HỌP **SONIC**

1 SQUARE TOP / BÀN HỌP VUÔNG

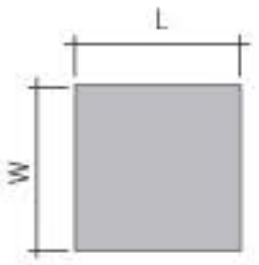

CODE	L	W	H
SN 0606 M	60	60	75
SN 0808 M	80	80	75
SN 1010 M	100	100	75
SN 1212 M	120	120	75

2 ROUND TOP / BÀN HỌP TRÒN

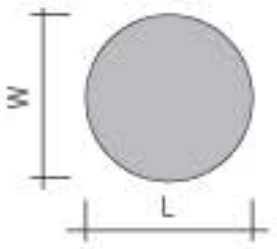

CODE	L	W	H
SN C 0808 M	80	80	75
SN C 1010 M	100	100	75

3 RECTANGULAR TOP / BÀN HỌP HÌNH CHỮ NHẬT

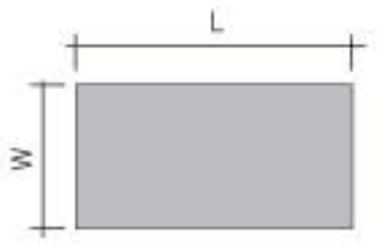

CODE	L	W	H
SN 2010 M	200	100	75
SN 2412 M	240	120	75

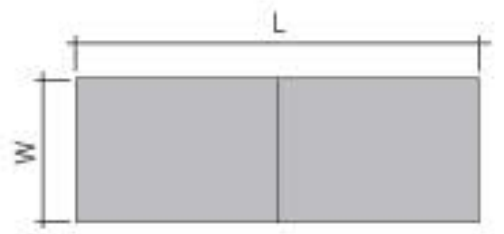

CODE	L	W	H
SN 4012 M	400	120	75

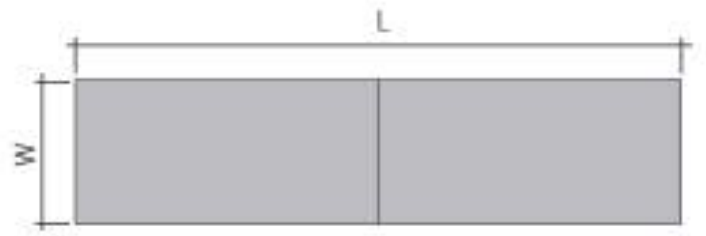

CODE	L	W	H
SN 4816 M	480	160	75

4 OVAL TOP / BÀN HỌP HÌNH OVAL

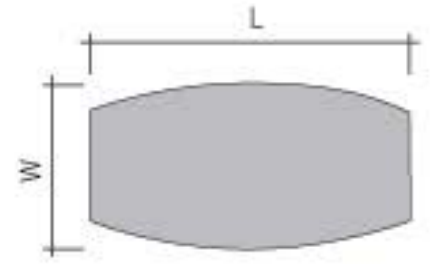

CODE	L	W	H
SN O 2412 M	240	120	75

SONIC SPECIFICATION / THÔNG SỐ KỸ THUẬT BÀN QUẢN LÝ **SONIC**

1 EXECUTIVE L - SHAPE DESKTOPS / BÀN QUẢN LÝ CHỮ L

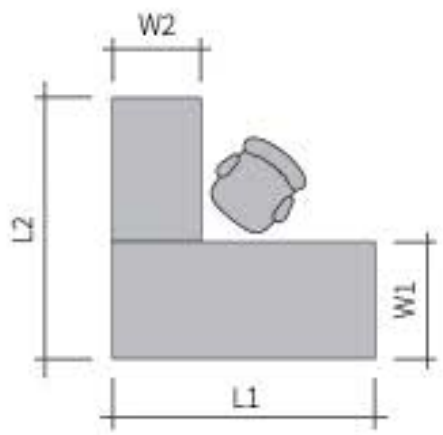

CODE	L1/W1	L2/W2	H
SN E - LSD - 1818 7-6 L/R	180/70	180/60	75
SN E - LSD - 2018 8-6 L/R	200/80	180/60	75

2 EXECUTIVE L - SHAPE DESKTOPS WITH SIDE DRAWER / BÀN QUẢN LÝ CHỮ L VỚI 1 TỦ

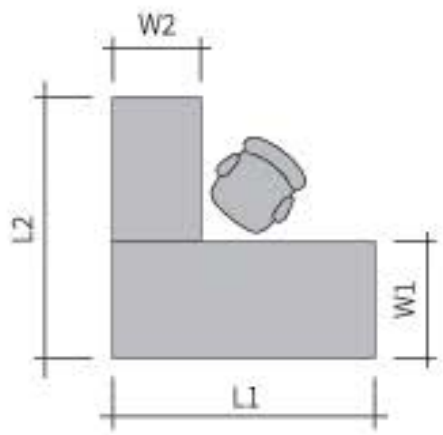

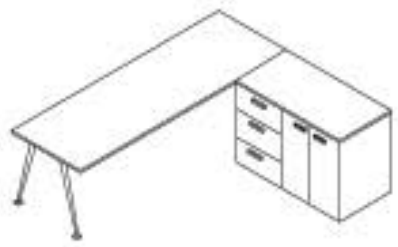

CODE	L1/W1	L2/W2	H
SN E D - LSD - 1820 7-5 L/R	180/70	190/50	75
SN E D - LSD - 2021 8-5 L/R	200/80	200/50	75

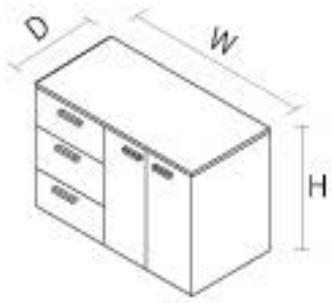

CODE	W	D	H
SN E C 1200	120	50	75

WHAT'S YOUR WORK STYLE?

In our study of work and workers, we' ve noticed there are three major worker styles. Each worker style - mobile, resident, or flex (a mix of mobile and resident) - has its own considerations, which affect your workplace and the tools you need.

Elegance from the Top to Toe

CURVE conference and meeting solution for sure will impress you at the first glance. The clear design, polished chrome legs and high quality table top create a sophisticated executive environment, while still maintain the office's elegant style.

Clean office is our concern !

We put a lot effort to bring a better cable management for this system. Specially designed flipper allows access to the wiring compartment, while cable from the floor is well managed. This help to ensure the wires and socket can be concealed effectively.

System Overview

Standard Single Desk
[BÀN ĐƠN]

CODE	L	W	H
CU E - 0818	80	180	75
CU E - 0820	80	200	75
CU E - 0822	80	220	75

Desk with Side Return
[BÀN CÓ TỦ PHỤ 1]

CODE	L	W	H
CU E D1 - 1718	170	180	75
CU E D1 - 1720	170	200	75
CU E D1 - 1722	170	220	75

Desk with Side Return
[BÀN CÓ TỦ PHỤ 2]

CODE	L	W	H
CU E D2 - 1118	119	180	75
CU E D2 - 1120	119	200	75
CU E D2 - 1122	119	220	75

Conference Table
[BÀN HỌP]

CODE	L	W	H
CU 1224 M	120	240	75
CU 1236 M	120	360	75

Round Discussion Table
[BÀN THẢO LUẬN DẠNG TRÒN]

CODE	L	W	H
CU C - 1010 M	100	100	75
CU C - 1212 M	120	120	75

Square Discussion Table
[BÀN THẢO LUẬN DẠNG VUÔNG]

CODE	L	W	H
CU R - 1010 M	100	100	75
CU R - 1212 M	120	120	75

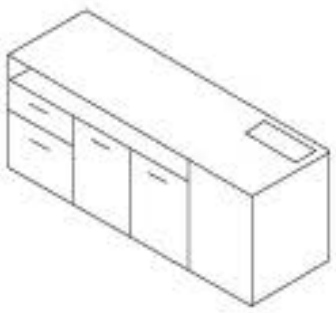

Side Return Cabinet
[TỦ PHỤ 1]

CODE	W	D	H
CU E C1 - 0517	55	170	610

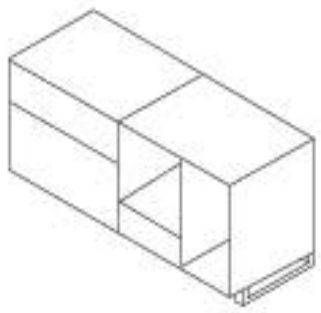

Side Return Cabinet
[TỦ PHỤ 2]

CODE	W	D	H
CU E C2 - 0411	45	120	610

Modesty Panel (Wood)
[TẤM CHE PHÍA TRƯỚC MFC]

CODE	W	H	T
CU MP (W) - 1103	110	30	18
CU MP (W) - 1303	130	30	18
CU MP (W) - 1503	150	30	18

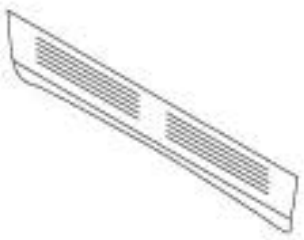

Modesty Panel (Metal)
[TẤM CHE PHÍA TRƯỚC SẮT]

CODE	W	H	T
CU MP (M) - 1103	110	30	0.2
CU MP (M) - 1303	130	30	0.2
CU MP (M) - 1503	150	30	0.2

YOUR OFFICE IS YOUR BRAND, TOO

A company's physical presence communicates a message, whether intended or not. It can validate your customers' perceptions of your business, increase employee recruitment and retention, define brand identity. Or put impressions of all of them into a nosedive.

By looking at branding from a three - dimensional perspective - a perpective that considers all aspects of business strategy, workspace included - you're much more likely to get a distinctive, compelling brand.

MOLEX boundaries without limits

MOLEX, are fully invests in innovative and design to bring you surprisingly a slim look and high quality furniture product. 50mm thickness of panes will gives you aesthetic and performance options with changeable panels and skins, stack on glass screen, stogages and all the components that alingned with MERRYFAIR product lines.

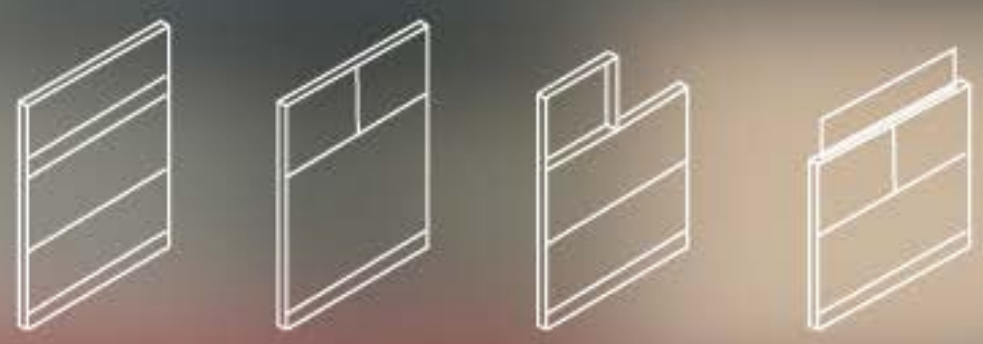

Multiple screen configurations.
Screen can located in both direction, vertical or horizontal.

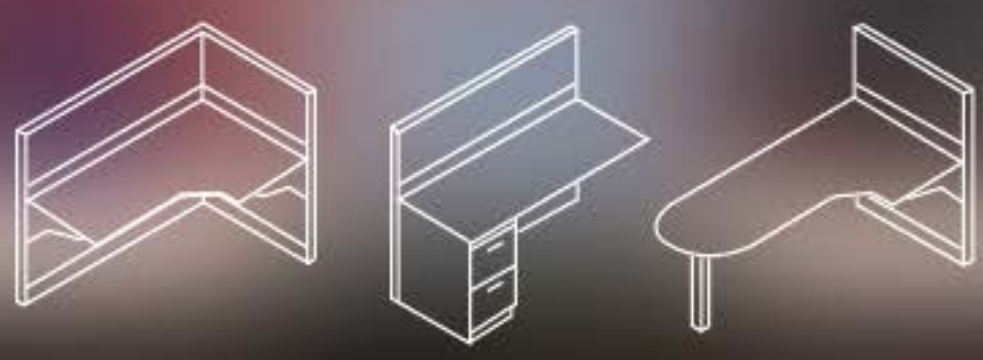

Multiple worksurface and supports.
Allow a variety of office layouts and configurations.

Variety storage and accessories.
Easy mounted storage and accessories to panel.

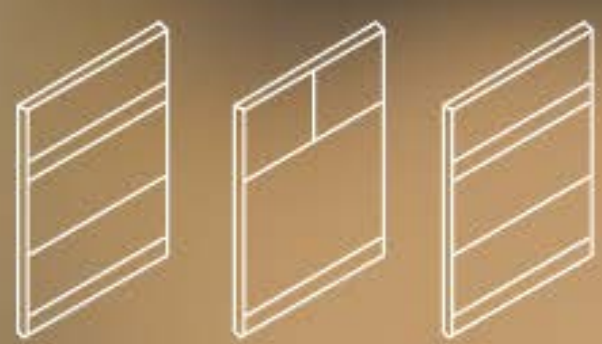

Easy accessories.
The wire management system are allow a flexibility on cabling directions.

Molex

Slim, simple and stylish

HYBRID space planing solutions

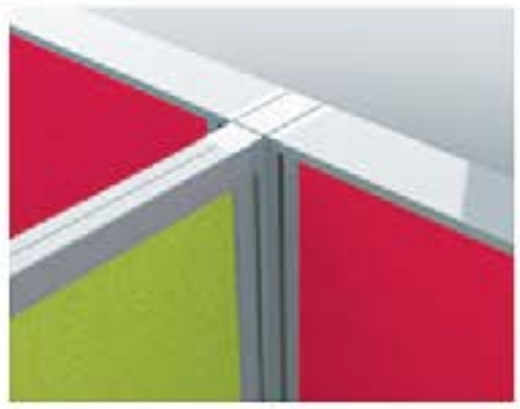

Molex hybrid with MXI System
(25mm thick panel)

Molex hybrid with HAZI System
(35mm thick panel)

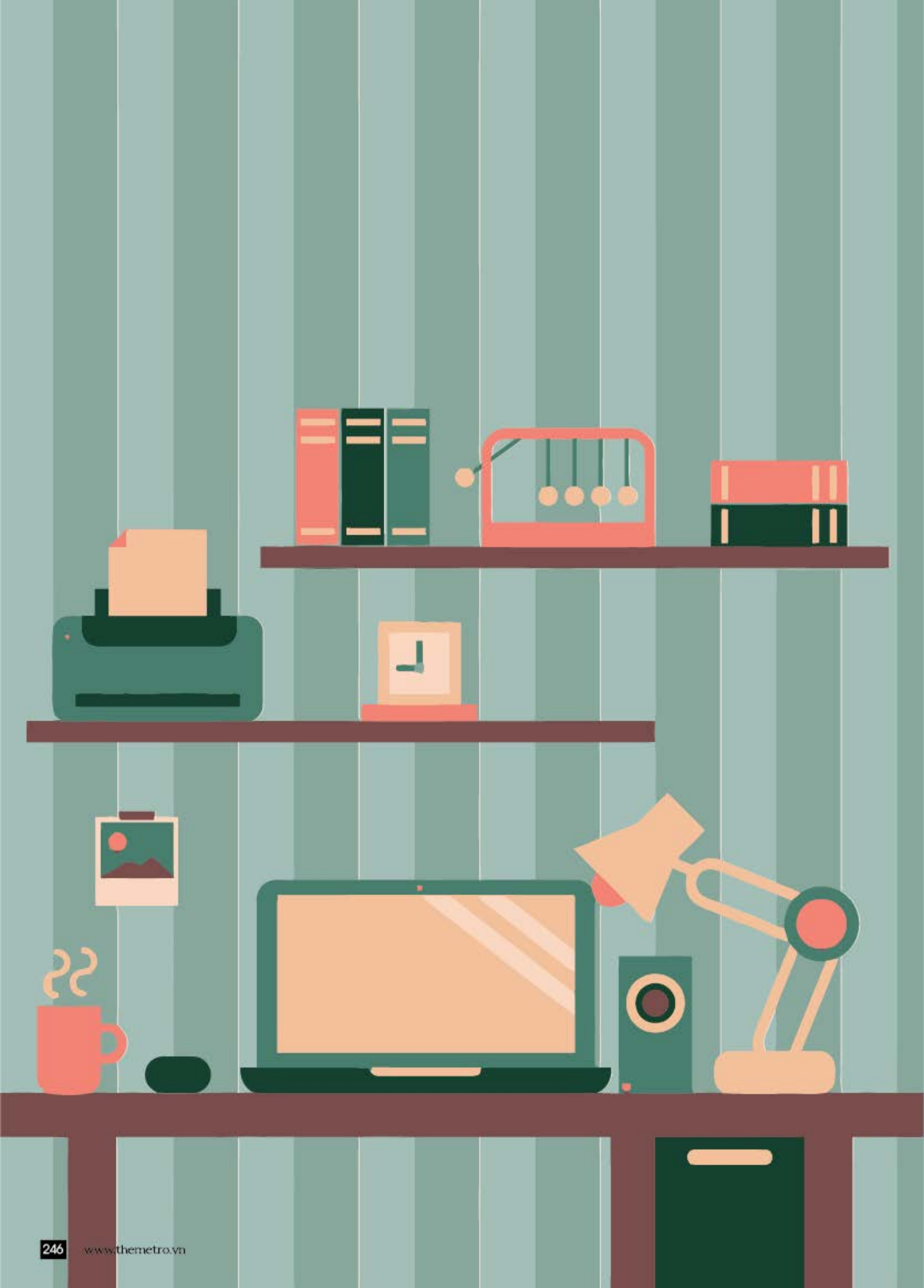

TIMELESS DESIGN.
COMPLETE SOLUTIONS.

Introducing the TheCity Collection, our comprehensive new portfolio of authentic modern designs that let you select, furnish, and create complete environments in a variety of settings - from the boardroom to the backyard.

BRIO Series

Brio

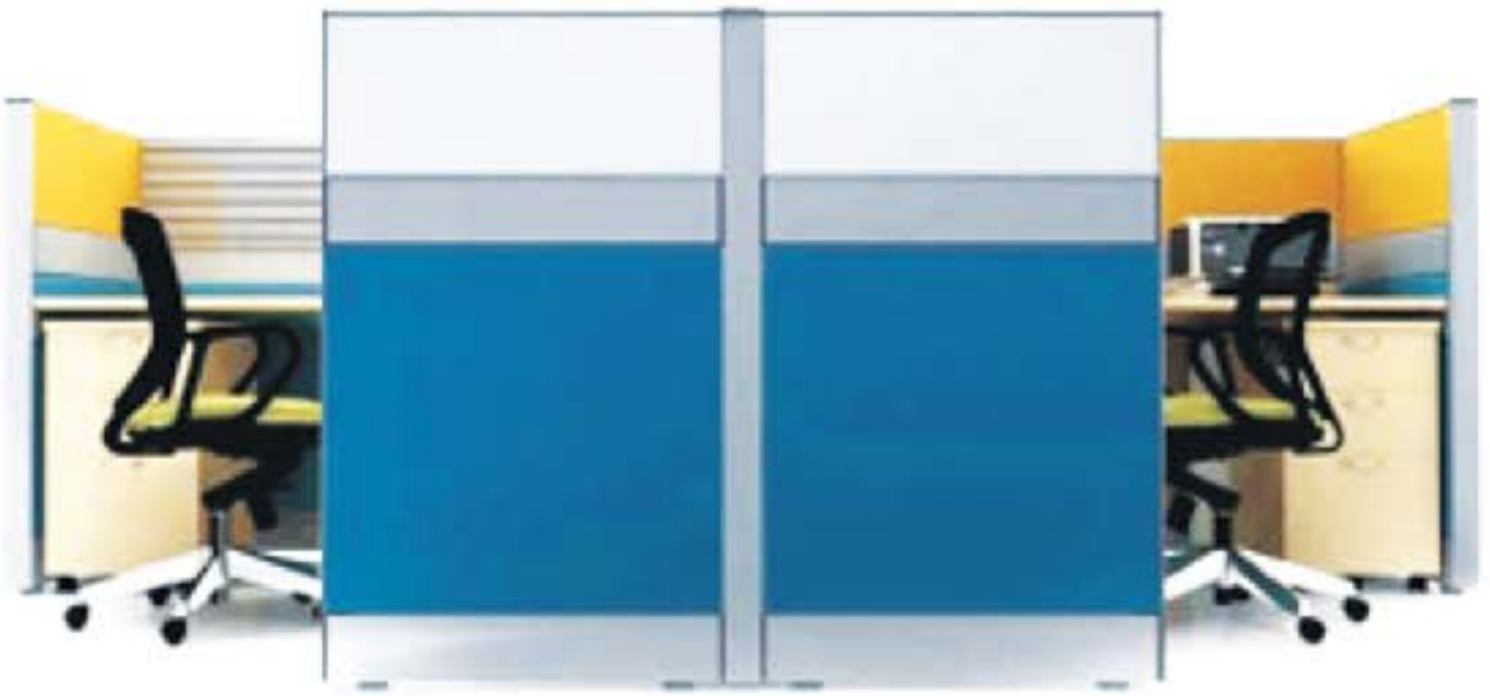

FOCUS...

where individual concentration is important
to increase productivity

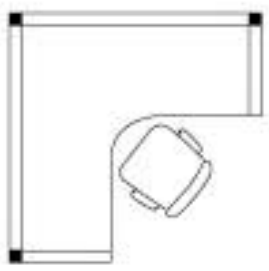

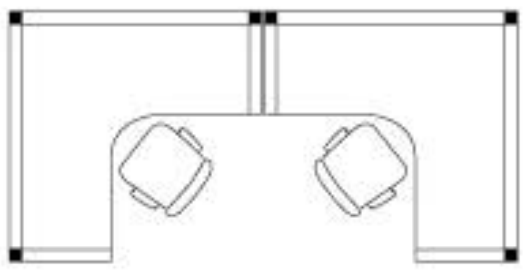

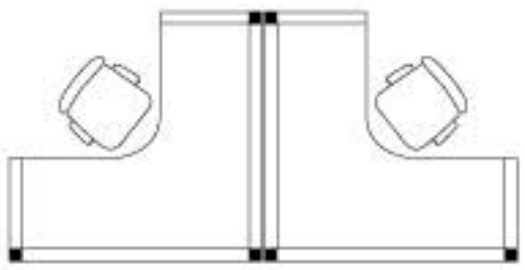

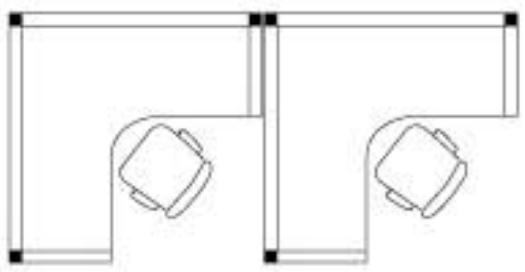

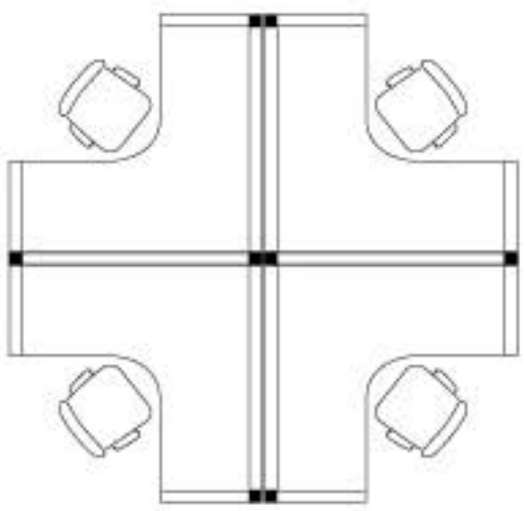

Brio

for people who are highly mobile

TOUCHDOWN SPACES

give sales people, visitors or temporary staff
to plug in & get connected

120° workspace
creates **open & inviting** environment
which
encourage interaction & collaboration

workspace with
a **different perspective**
furthering the connections with others

an inviting space along with the flexibility to meet the **public** or work in **private**

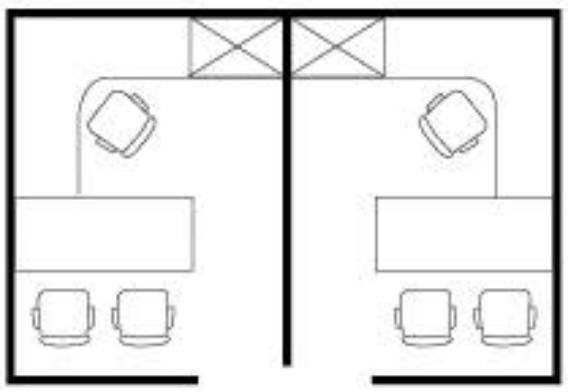

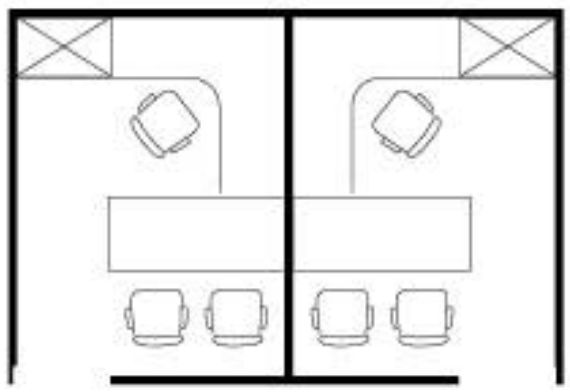

Wire Management

Wiring Accessory

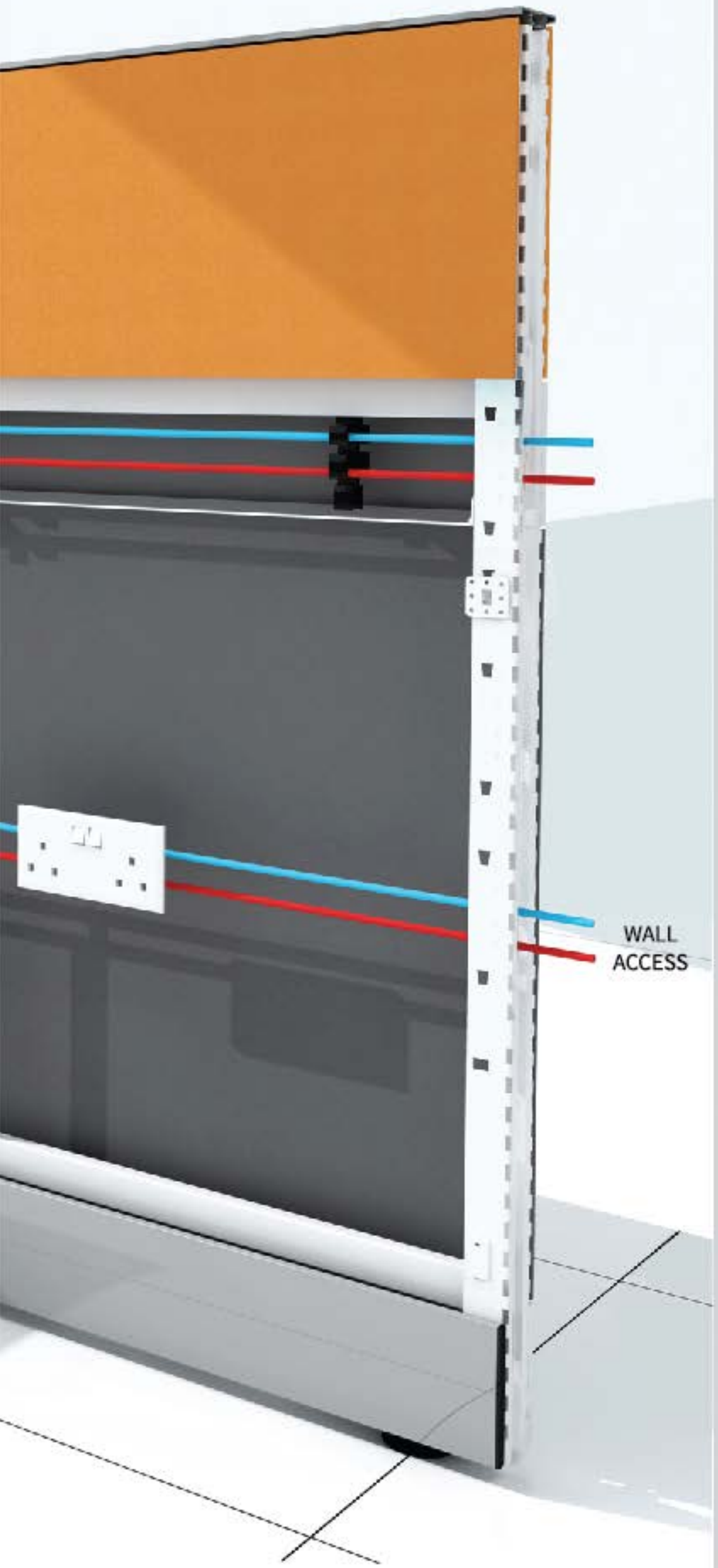

POWER ACCESS

Grommet

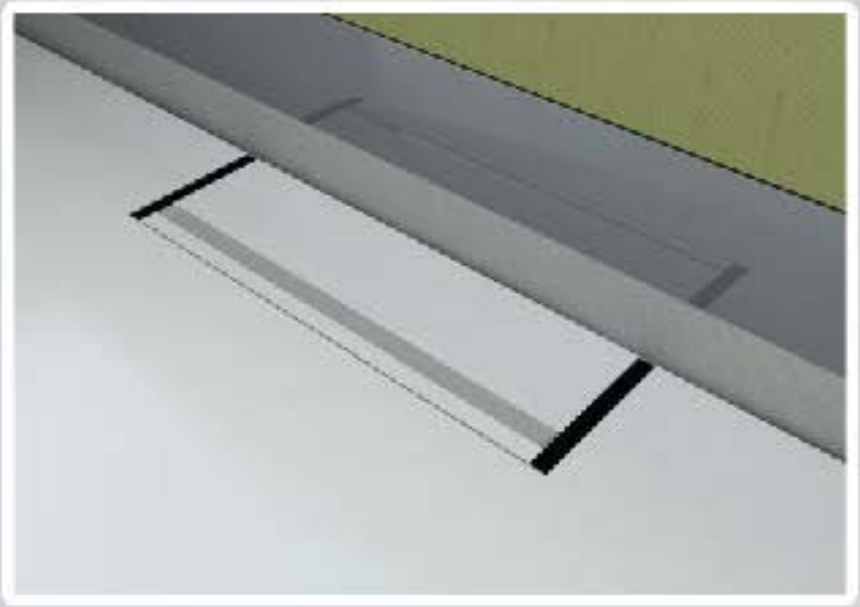

Power box

Power panel

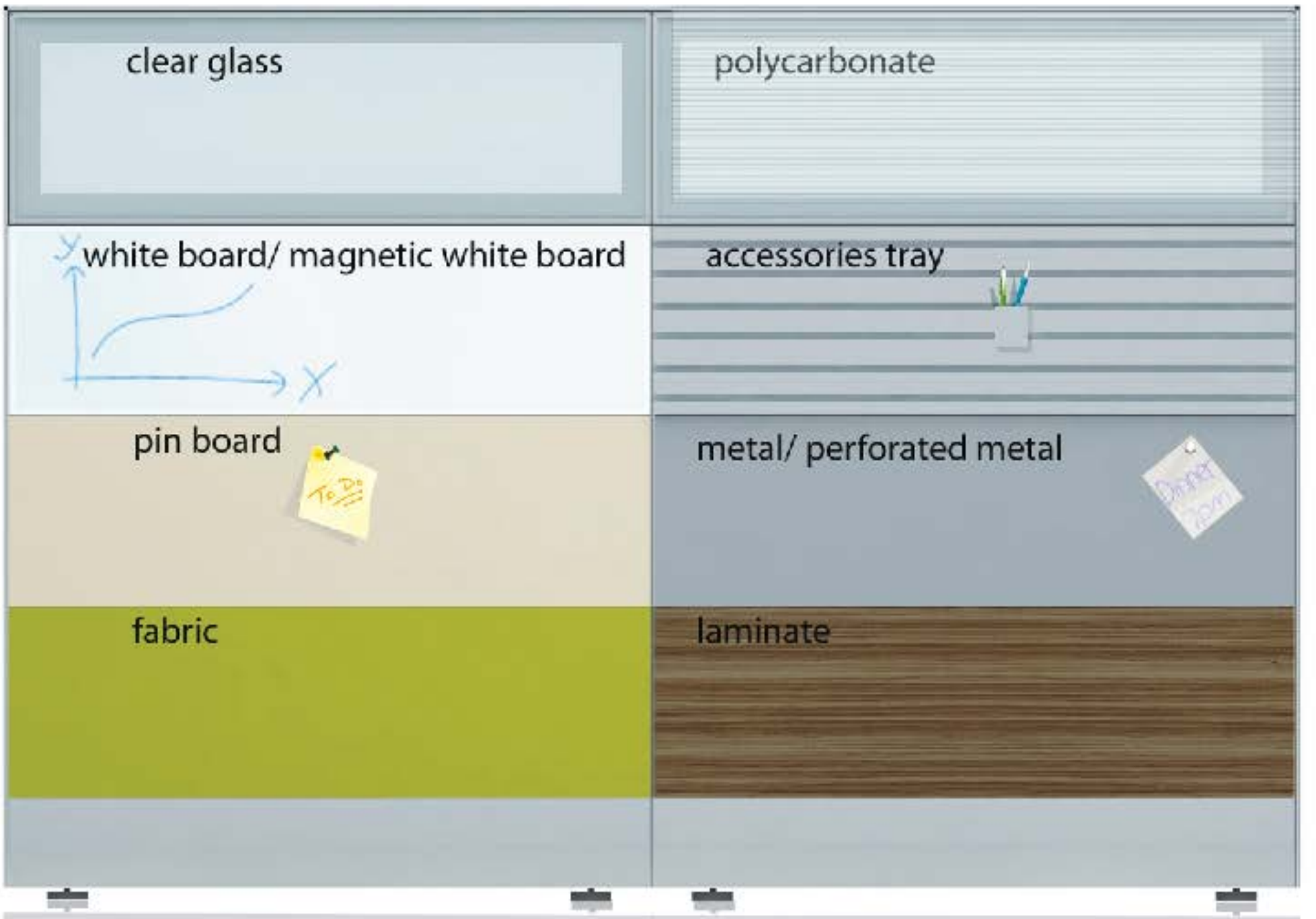

MATERIALS and CONNECTIONS

Standard height
Basic Tile: 950 mm
Add-on Tile: 300 & 400 mm

H	W
950	450
1250	600
1350	750
1550	900
1650	1050
1750	1200
1850	1500
2150	

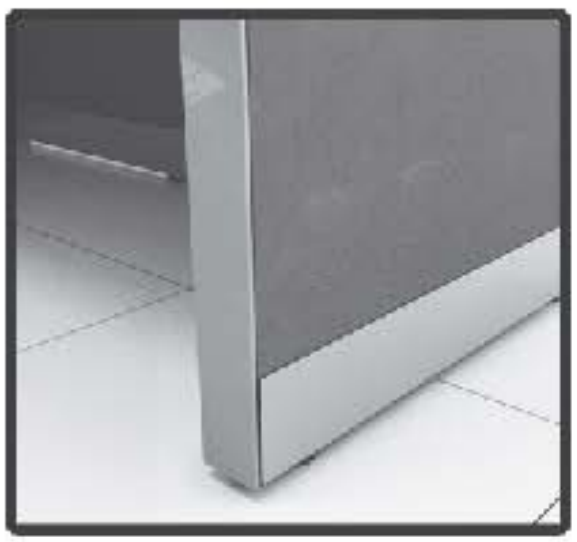

TIME IN MASA

When considering the furniture for a training room, flexibility seems to be the key issue for most companies. Many can only devote a certain amount of space for training. For example, the same furnuturemay used for computer based training in the morning and might then be used to accommodate a role playing exercise in the aftermoon. Some expert say that tables, chairs and walls can make or break a training session.

Merryfair always up for every challenge possible, we solved by making the folding mechanism table very simple.

TIME IN MASA

When considering the furniture for a training room, flexibility seems to be the key issue for most companies. Many can only devote a certain amount of space for training. For example, the same furnuturemay used for computer based training in the morning and might then be used to accommodate a role playing exercise in the afternoon. Some expert say that tables, chairs and walls can make or break a training session.

Merryfair always up for every challenge possible, we solved by making the folding mechanism table very simple.

MASA without modesty panel

MASA with metal modesty panel

Conference & Training

The way a trainer arranges a room dictates the effectiveness of the training session. The goal is to create an environment that promotes learning by both students and trainers interacting freely and constructively together. To accomplish this, a trainer must evaluate how the room will accommodate the lesson plan. The furniture and seating arrangements can be organized in a variety of different ways.
The more flexible the furniture, the easire it will create different seating style to fit the immediate need.

MASA will enhance the look and performance of any multi-purpose training, conference or classroom area.
MASA is easily folds, so one person can set it up or take it down.
Move and compactly store a roomful of tables with minimal effort.

Special design on "Release Handle" for easy folded table by a single hand.

Bigger castor provide stability and durability

Easy storage, folded and moved around

Available in 2 widths

1200mm & 1500mm

Standard table depth of 750mm

Standard height of 750mm

TABLE LEG

Frame in standard white colour.

1200mm

FTMAS120075

1500mm

FTMAS150075

TABLE TOP

Depth 750mm

1200mm

TBLRT120075

1500mm

TBLRT150075

MODESTY PANEL

Standard white colour, height 400mm

1200mm

MPMASMO120040

1500mm

MPMASMO150040

CABINET

There are many variations of passages of Lorem Ipsum available, but the majority have suffered alteration in some form, by injected humour, or randomised words which don't look even slightly believable. If you are going to use a passage of Lorem Ipsum, you need to be sure there isn't anything embarrassing hidden in the middle of text. All the Lorem Ipsum generators on the Internet tend to repeat predefined chunks as necessary, making this the first true generator on the Internet.

The standard chunk of Lorem Ipsum used since the 1500s is reproduced below for those interested. Sections 1.10.32 and 1.10.33 from "de Finibus Bonorum et Malorum" by Cicero are also reproduced in their exact original form, accompanied by English versions from the 1914 translation by H. Rackham.

There are many variations of passages of Lorem Ipsum available, but the majority have suffered alteration in some form, by injected humour, or randomised words which don't look even slightly believable. If you are going to use a passage of Lorem Ipsum, you need to be sure there isn't anything embarrassing hidden in the middle of text. All the Lorem Ipsum generators on the Internet tend to repeat predefined chunks as necessary, making this the first true generator on the Internet.

CABINET 750 / TỦ HỒ SƠ 750

CA - 8075 - OP - 2 - 0
80 L x 40 W x 75 H

CA - 8075 - HH - 2 - 2
80 L x 40 W x 75 H

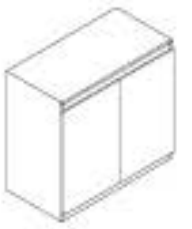

CA - 8075 - HG - 2 - 2
80 L x 40 W x 75 H

CA - 8075 - GD - 2 - 2
80 L x 40 W x 75 H

CA - 8075 - SL - 2 - 2
80 L x 40 W x 75 H

CA - 12075 - HH - 2 - 2
120 L x 40 W x 75 H

CA - 16075 - HH - 2 - 2
160 L x 40 W x 75 H

CA - 12075 - HG - 2 - 2
120 L x 40 W x 75 H

CA - 16075 - HG - 2 - 2
160 L x 40 W x 75 H

CA - 12075 - GD - 2 - 2
120 L x 40 W x 75 H

CA - 16075 - GD - 2 - 2
160 L x 40 W x 75 H

CABINET 847 / TỦ HỒ SƠ 847

CA - 8084 - OP - 2
80 L x 40 W x 82.6 H

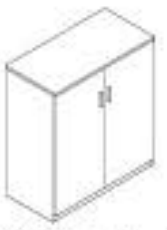

CA - 8084 - HH - 2 - 2
80 L x 40 W x 82.6 H

CA - 8084 - HG - 2 - 2
80 L x 40 W x 82.6 H

CA - 8084 - GD - 2 - 2
80 L x 40 W x 82.6 H

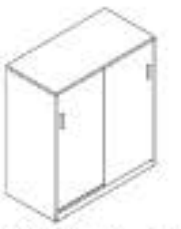

CA - 8084 - SL - 2 - 2
80 L x 40 W x 82.6 H

CA - 12084 - HH - 2 - 2
120 L x 40 W x 82.6 H

CA - 16084 - HH - 2 - 2
160 L x 40 W x 82.6 H

CA - 12084 - HG - 2 - 2
120 L x 40 W x 82.6 H

CA - 16084 - HG - 2 - 2
160 L x 40 W x 82.6 H

CA - 12084 - GD - 2 - 2
120 L x 40 W x 82.6 H

CA - 16084 - GD - 2 - 2
160 L x 40 W x 82.6 H

CABINET 1247 / TỦ HỒ SƠ 1247

CA - 80124 - OP - 3
80 L x 40 W x 122.4 H

CA - 80124 - HH - 3 - 2
80 L x 40 W x 122.4 H

CA - 80124 - HH - 3 - 3
80 L x 40 W x 122.4 H

CA - 80124 - HG - 3 - 2
80 L x 40 W x 122.4 H

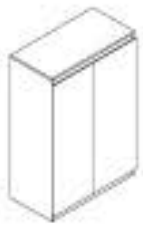
CA - 80124 - HG - 3 - 3
80 L x 40 W x 122.4 H

CA - 80124 - GD - 3 - 2
80 L x 40 W x 122.4 H

CA - 80124 - GD - 3 - 3
80 L x 40 W x 122.4 H

CA - 80124 - SL - 3 - 2
80 L x 40 W x 122.4 H

CA - 80124 - SL - 3 - 3
80 L x 40 W x 122.4 H

CA - 120124 - HH - 3 - 2
120 L x 40 W x 122.4 H

CA - 160124 - HH - 3 - 2
160 L x 40 W x 122.4 H

CA - 160124 - HH - 3 - 3
160 L x 40 W x 122.4 H

CA - 120124 - HH - 3 - 3
120 L x 40 W x 122.4 H

CA - 120124 - HG - 3 - 2
120 L x 40 W x 122.4 H

CA - 160124 - HG - 3 - 2
160 L x 40 W x 122.4 H

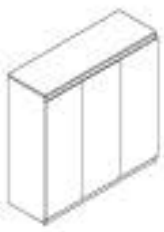
CA - 120124 - HG - 3 - 3
120 L x 40 W x 122.4 H

CA - 160124 - HG - 3 - 3
160 L x 40 W x 122.4 H

CABINET 1647 / TỦ HỒ SƠ 1647

CA - 80164 - OP - 4
80 L x 40 W x 162.2 H

CA - 80164 - HH - 4 - 2
80 L x 40 W x 162.2 H

CA - 80164 - HH - 4 - 3
80 L x 40 W x 162.2 H

CA - 80164 - HH - 4 - 4
80 L x 40 W x 162.2 H

CA - 80164 - HG - 4 - 2
80 L x 40 W x 162.2 H

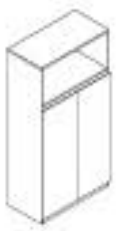
CA - 80164 - HG - 4 - 3
80 L x 40 W x 162.2 H

CA - 80164 - SL - 4 - 2
80 L x 40 W x 162.2 H

CA - 80164 - SL - 4 - 3
80 L x 40 W x 162.2 H

CA - 80164 - SL - 4 - 4
80 L x 40 W x 162.2 H

CA - 80164 - GD - 4 - 4
80 L x 40 W x 162.2 H

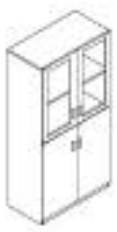
CA - 80164 - DB - 4 - 2
80 L x 40 W x 162.2 H

CA - 80204 - OP - 5
80 L x 40 W x 202.0 H

CA - 80204 - HH - 5 - 2
80 L x 40 W x 202.0 H

CA - 80204 - HH - 5 - 3
80 L x 40 W x H

CA - 80204 - HH - 5 - 4
80 L x 40 W x 202.0 H

CA - 80204 - HG - 5 - 2
80 L x 40 W x 202.0 H

CA - 80204 - HG - 5 - 3
80 L x 40 W x 202.0 H

CA - 80204 - HG - 5 - 4
80 L x 40 W x 202.0 H

CA - 80204 - DB - 5 - 5
80 L x 40 W x 202.0 H

CA - 80204 - HG - 5 - 5
80 L x 40 W x 202.0 H

CABINET WITH HANDLES
TỦ CÓ TAY NẮM

635

PD - 4060 - HH1 - 3
40 L x 50 W x 600 H

PD - 4060 - HH2 - 3
40 L x 50 W x 600 H

528

PD - 4052 - HH1 - 3
40 L x 50 W x 52 H

PD - 4052 - HH2 - 2
40 L x 50 W x 52 H

725

PD - 4072 - HH - 3
40 L x 50 W x 72.5 H

CABINET WITHOUT HANDLES
TỦ KHÔNG CÓ TAY NẮM

635

PD - 4060 - HG1 - 3
40 L x 50 W x 60 H

PD - 4060 - HG2 - 3
40 L x 50 W x 60 H

528

PD - 4052 - HG1 - 3
40 L x 50 W x 52 H

PD - 4052 - HG2 - 2
40 L x 50 W x 52 H

725

PD - 4072 - HG - 3
40 L x 50 W x 72.5 H

SCREEN / VÁCH NGĂN

STELL SCREEN / VÁCH THÉP ĐỤC LỖ

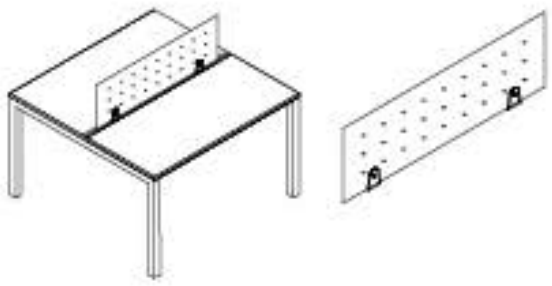

CODE	W	H	T
P - FM 1035	100	35	0.08
P - FM 1235	120	35	0.08
P - FM 1435	140	35	0.08
P - FM 1635	160	35	0.08
P - FM 1835	180	35	0.08

WOOD SCREEN / VÁCH GỖ

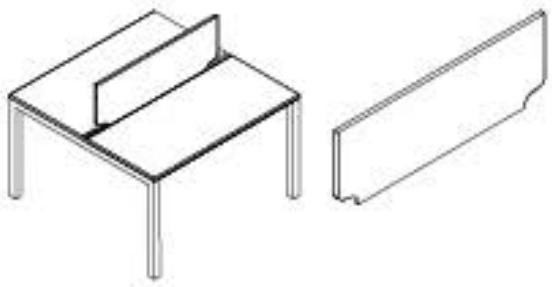

CODE	W	H	T
P - W 1035	100	35	1.8
P - W 1235	120	35	1.8
P - W 1435	140	35	1.8
P - W 1635	160	35	1.8
P - W 1835	180	35	1.8

TEMPERED GLASS SCREEN / VÁCH KÍNH CƯỜNG LỰC

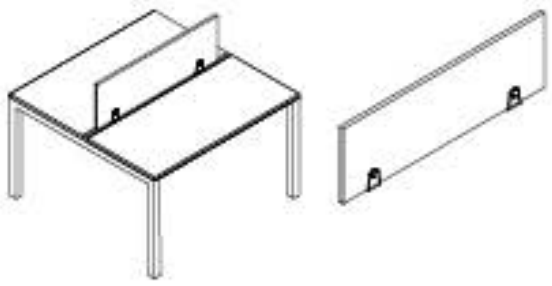

CODE	W	H	T
P - G 1035	100	35	0.8
P - G 1235	120	35	0.8
P - G 1435	140	35	0.8
P - G 1635	160	35	0.8
P - G 1835	180	35	0.8

FABRIC WOOD SCREEN / VÁCH GỖ BỌC VẢI

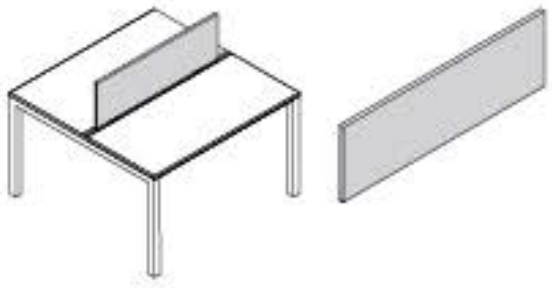

CODE	W	H	T
P - FR 1035	100	35	2.5
P - FR 1235	120	35	2.5
P - FR 1435	140	35	2.5
P - FR 1635	160	35	2.5
P - FR 1835	180	35	2.5

MXI SCREEN / VÁCH NGĂN KIỂU MXI

MAGNETIC WHITE BOARD SCREEN / VÁCH NGĂN BẢNG TỪ

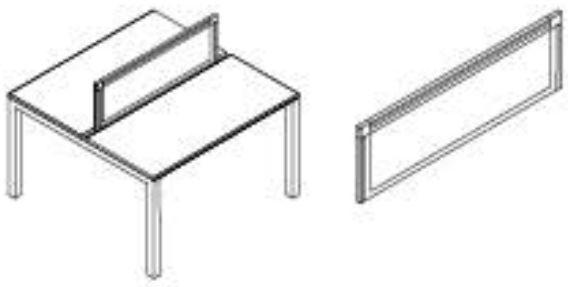

CODE	W	H	T
P-MXI-MWB 1035	100	35	2.5
P-MXI-MWB 1235	120	35	2.5
P-MXI-MWB 1435	140	35	2.5
P-MXI-MWB 1635	160	35	2.5
P-MXI-MWB 1835	180	35	2.5

FABRIC SCREEN / VÁCH NGĂN VẢI

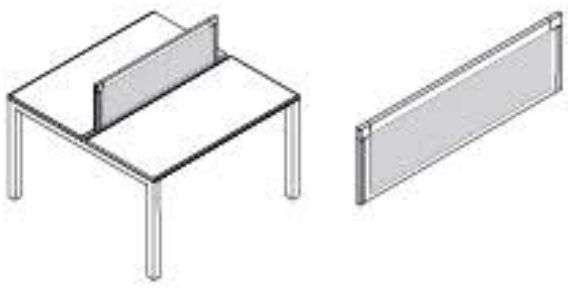

CODE	W	H	T
P-MXI-F1-1035	100	35	2.5
P-MXI-F1-1235	120	35	2.5
P-MXI-F1-1435	140	35	2.5
P-MXI-F1-1635	160	35	2.5
P-MXI-F1-1835	180	35	2.5

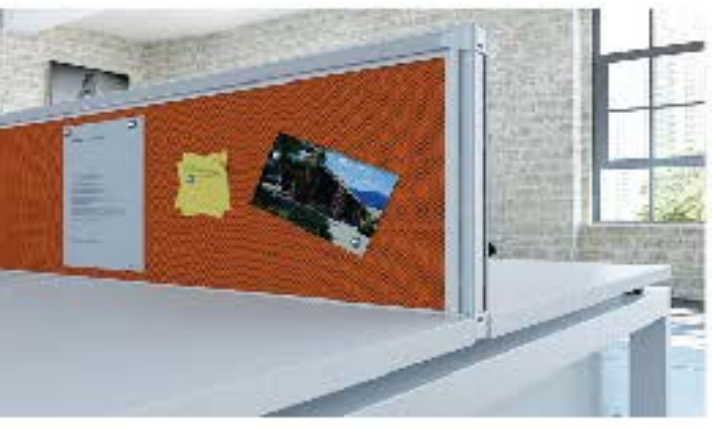

PINABLE FABRIC SCREEN / VÁCH NGĂN VẢI CÓ THỂ BẤM GHIM

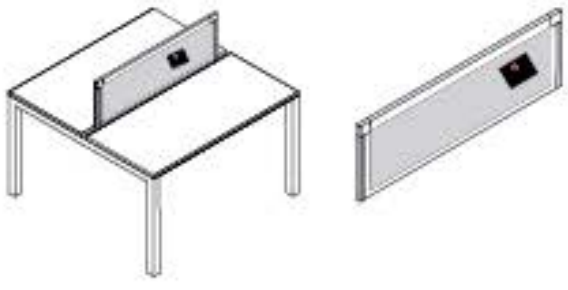

CODE	W	H	T
P-MXI-F2-1035	100	35	2.5
P-MXI-F2-1235	120	35	2.5
P-MXI-F2-1435	140	35	2.5
P-MXI-F2-1635	160	35	2.5
P-MXI-F2-1835	180	35	2.5

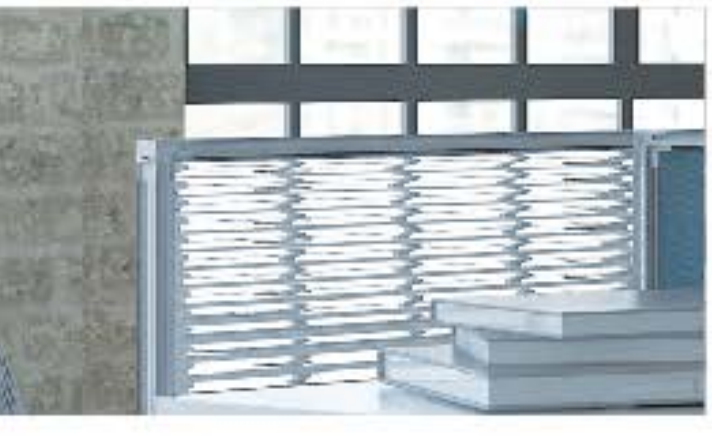

POLY SCREEN / VÁCH NGĂN POLYCARBON

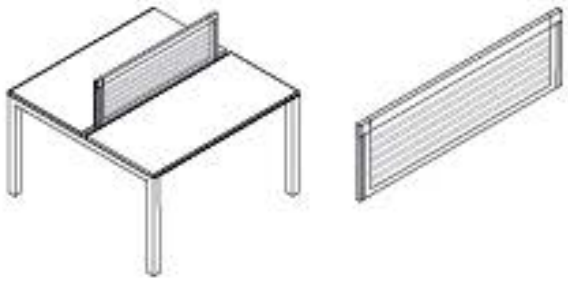

CODE	W	H	T
P-MXI-PL-1035	100	35	2.5
P-MXI-PL-1235	120	35	2.5
P-MXI-PL-1435	140	35	2.5
P-MXI-PL-1635	160	35	2.5
P-MXI-PL-1835	180	35	2.5

GLASS SCREEN / VÁCH NGĂN KÍNH

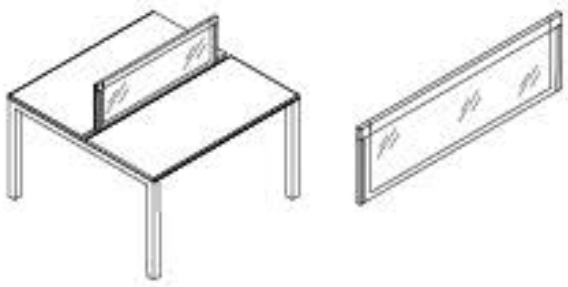

CODE	W	H	T
P-MXI-G-1035	100	35	2.5
P-MXI-G-1235	120	35	2.5
P-MXI-G-1435	140	35	2.5
P-MXI-G-1635	160	35	2.5
P-MXI-G-1835	180	35	2.5

MULTI FUNCTION SCREEN / VÁCH NGĂN ĐA NĂNG

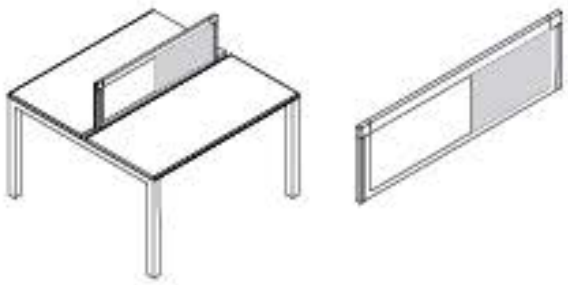

CODE	W	H	T
P-MXI-MF-1035	100	35	2.5
P-MXI-MF-1235	120	35	2.5
P-MXI-MF-1435	140	35	2.5
P-MXI-MF-1635	160	35	2.5
P-MXI-MF-1835	180	35	2.5

HAZI SCREEN / VÁCH NGĂN KIỂU HAZI

MAGNETIC WHITE BOARD SCREEN / VÁCH NGĂN BẢNG TỪ

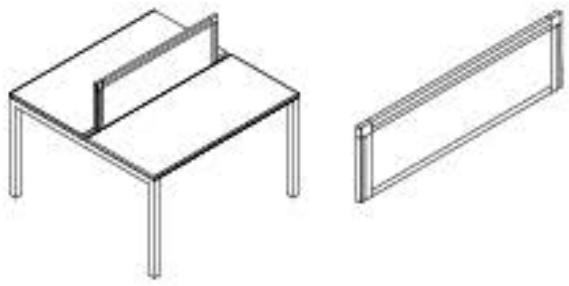

CODE	W	H	T
P-HZ-MWB 1035	100	35	3.5
P-HZ-MWB 1235	120	35	3.5
P-HZ-MWB 1435	140	35	3.5
P-HZ-MWB 1635	160	35	3.5
P-HZ-MWB 1835	180	35	3.5

FABRIC SCREEN / VÁCH NGĂN VẢI

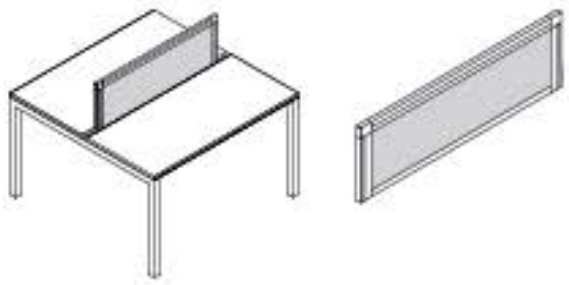

CODE	W	H	T
P-HZ-F1-1035	100	35	3.5
P-HZ-F1-1235	120	35	3.5
P-HZ-F1-1435	140	35	3.5
P-HZ-F1-1635	160	35	3.5
P-HZ-F1-1835	180	35	3.5

PINABLE FABRIC SCREEN / VÁCH NGĂN VẢI CÓ THỂ BẤM GHIM

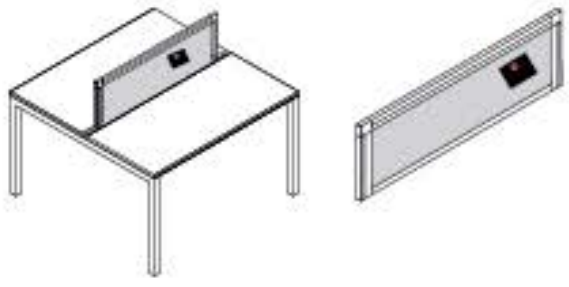

CODE	W	H	T
P-HZ-F2-1035	100	35	3.5
P-HZ-F2-1235	120	35	3.5
P-HZ-F2-1435	140	35	3.5
P-HZ-F2-1635	160	35	3.5
P-HZ-F2-1835	180	35	3.5

POLY SCREEN / VÁCH NGĂN POLYCARBON

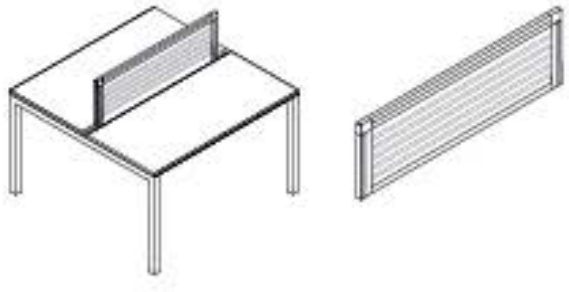

CODE	W	H	T
P-HZ-PL-1035	100	35	3.5
P-HZ-PL-1235	120	35	3.5
P-HZ-PL-1435	140	35	3.5
P-HZ-PL-1635	160	35	3.5
P-HZ-PL-1835	180	35	3.5

GLASS SCREEN / VÁCH NGĂN KÍNH

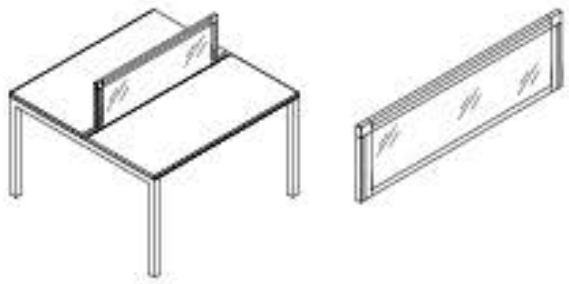

CODE	W	H	T
P-HZ-G-1035	100	35	3.5
P-HZ-G-1235	120	35	3.5
P-HZ-G-1435	140	35	3.5
P-HZ-G-1635	160	35	3.5
P-HZ-G-1835	180	35	3.5

MULTI FUNCTION SCREEN / VÁCH NGĂN ĐA NĂNG

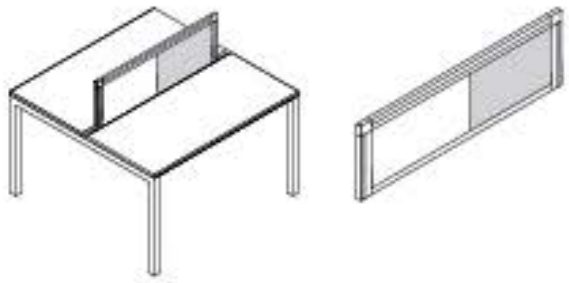

CODE	W	H	T
P-HZ-MF-1035	100	35	3.5
P-HZ-MF-1235	120	35	3.5
P-HZ-MF-1435	140	35	3.5
P-HZ-MF-1635	160	35	3.5
P-HZ-MF-1835	180	35	3.5

TEMPERED GLASS ON SCREEN / VÁCH NGĂN CÓ KÍNH BÊN TRÊN

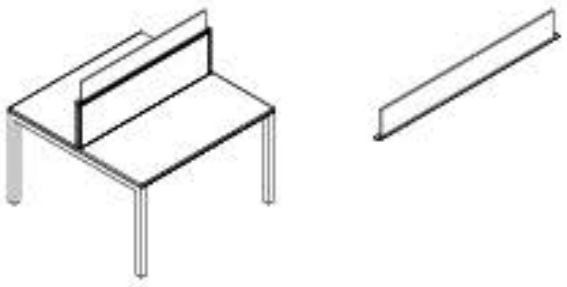

CODE	W	H	T
P-HZ-SG 0902	90	20	0.8
P-HZ-SG 1102	110	20	0.8
P-HZ-SG 1302	130	20	0.8
P-HZ-SG 1502	150	20	0.8
P-HZ-SG 1702	170	20	0.8

HANGING SCREEN / VÁCH NGĂN TREO

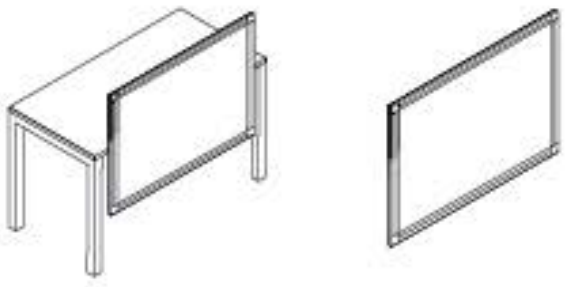

CODE	W	H	T
P-HZ-F 1275	120	75	3.5
P-HZ-F 1475	140	75	3.5
P-HZ-F 1675	160	75	3.5

ACCESSORIES / PHỤ KIỆN

L - SINGLE WIRE TRAY
[MÁNG ĐIỆN ĐƠN CHỮ L]

L - SWT 01: 80 W x 8 D x 10 H
L - SWT 02: 100 W x 8 D x 10 H
L - SWT 03: 120 W x 8 D x 10 H
L - SWT 04: 140 W x 8 D x 10 H
L - SWT 05: 160 W x 8 D x 10 H

JUNCTION BOX
[HỘP DẪN ĐIỆN]

JP 01

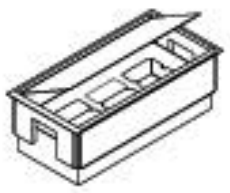

POWER BOX
[HỘP ĐIỆN]

PB 01: 50 W x 16.8 D x 12 H
PB 02: 35 W x 16.8 D x 12 H

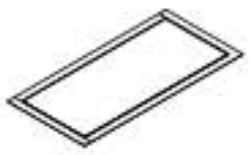

MFC FLIP UP TOP
[NẮP HỘP ĐIỆN MFC]

FUT 01: 30 W X 15 D
FUT 02: 50 W X 15 D

ADD-ON FUNCTION RAIL
[MÁNG TREO ĐA NĂNG]

FR 01
FR 02
FR 03

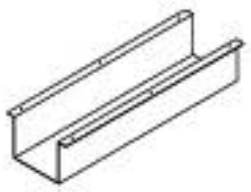

U - SINGLE WIRE TRAY
[MÁNG ĐIỆN ĐƠN CHỮ U]

U - SWT 01: 80 W x12 D x 10 H
U - SWT 02: 100 W x12 D x 10 H
U - SWT 03: 120 W x12 D x 10 H
U - SWT 04: 140 W x12 D x 10 H
U - SWT 05: 160 W x12 D x 10 H

JUNCTION BOX
[HỘP DẪN ĐIỆN]

JP 02

WIRE GUIDE
[ỐNG DẪN ĐIỆN]

WG 01

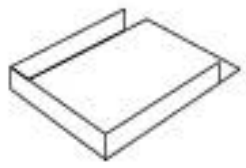

PAPER TRAY
[KHAY ĐỰNG GIẤY]

PT 01

CPU HOLDER
[GIÁ TREO CPU]

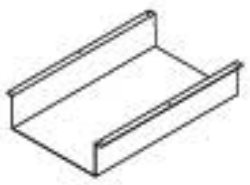

U - DOUBLE WIRE TRAY
[MÁNG ĐIỆN ĐÔI CHỮ U]

U - DWT 01: 80 W x 33 D x 10 H
U - DWT 02: 100 W x 33 D x 10 H
U - DWT 03: 120 W x 33 D x 10 H
U - DWT 04: 140 W x 33 D x 10 H
U - DWT 05: 160 W x 33 D x 10 H

WOODEN MODESTY C/W
HANGING BRACKET
[TẤM CHE PHÍA TRƯỚC MFC]

CODE	W	H	T
WM - H 0645	60	45	0.8
WM - H 0845	80	45	0.8
WM - H 1045	100	45	0.8
WM - H 1245	120	45	0.8
WM - H 1445	140	45	0.8
WM - H 1645	160	45	0.8

METAL MODESTY
HANGING BRACKET
[TẤM CHE PHÍA TRƯỚC SẮT]

CODE	W	H	T
MM - H 0645	60	45	0.8
MM - H 0845	80	45	0.8
MM - H 1045	100	45	0.8
MM - H 1245	120	45	0.8
MM - H 1445	140	45	0.8
MM - H 1645	160	45	0.8

BẢNG MÀU VÁN / MFC WOOD COLOR

NATURAL

Vivid Oak - 630 WN

Latte Maple - 325 T

Taboo - 640 WN

Oxford Cherry - 384 T

American Walnut - 338 T

WOOD GRAIN

Latin Oak - 10083 T

Wenge - 9241 ML

Rose Wood - 739 RM

SOLID COLOR

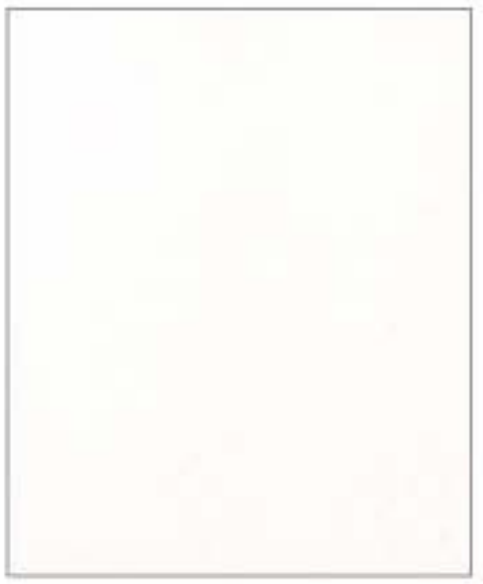

White - 101 T

Light Grey - 203 T

Dark Grey - 201 T

Pure Black - 230 T

BẢNG MÀU SƠN TĨNH ĐIỆN/POWDER COATINGS

White

Light Grey

Dark Grey

Black

RPB
RỒNG PHƯƠNG BẮC

Your office can do more - for you and your customers.
Find out how at www.themetro.vn

HCM OFFICE & SHOWROOM
196 Ton That Thuyet Street,
Ward 3, District 4,
HCM City, Viet Nam
T. 84 - 28 540 12341
F. 84 - 28 540 12343
Hotline 0914 777 332

HANOI REP OFFICE & SHOWROOM
3rd Floor, V+ Mall Hoa Binh,
505 Minh Khai Street,
Hai Ba Trung District, Ha Noi, Viet Nam
T. 84 - 24 3863 0888
F. 84 - 24 3863 0888
Hotline 0915 57 59 57

DANANG REP OFFICE & SHOWROOM
Lot 35, No 4 Street,
An Don Industrial Park,
Son Tra District, Da Nang City, Viet Nam
Hotline 0913 58 50 50

CAMBODIA REP OFFICE
Room 11B, 11th Floor Building No. 29,
Mao Tse Toung Blvd, Phnom Penh, Cambodia
Hotline +855 77 86 35 68

THE METRO®

HOTLINE
0915. 305. 768
www.themetro.vn

Specifications are subject to change without notice.